NOTES: 1. ASSEMBLE EITHER:
* IN LOCATIONS G5, H5 8269 AND JUMPER „S" OR
* IN LOCATIONS G4, H4 SN7485 AND JUMPER „T"

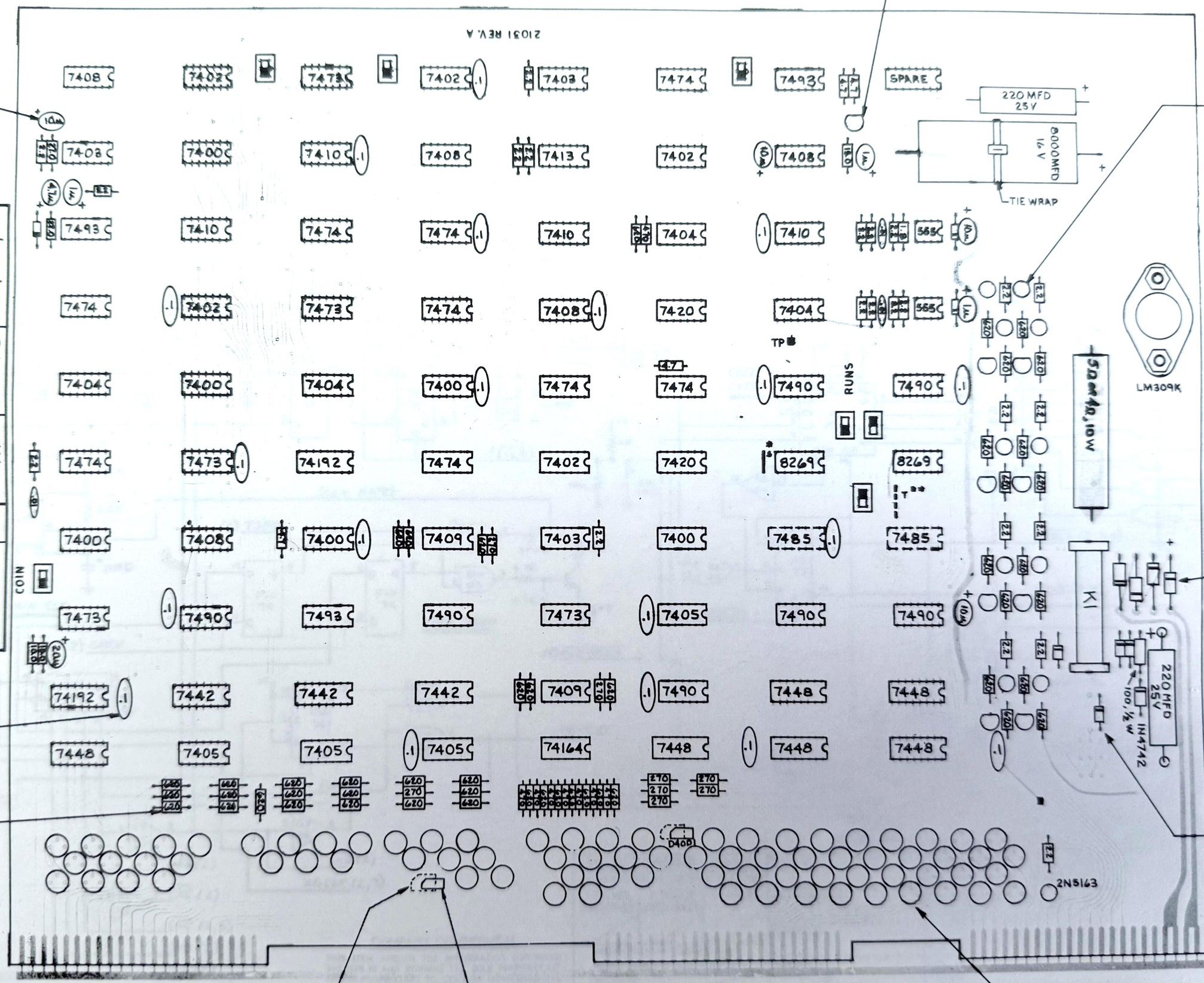

CLASS	CENTURY INDUSTRIES		
TITLE	COMPONENT ASSEMBLY WORLD SERIES II.		
SIZE B	CODE IDENT NO.	DWG NO. 21033	SHEET 1 OF 1
SCALE 1:1		WEIGHT	
DATE			
LAYOUT D.S.			
DRAFTSMAN			
CHECKER			
ENGINEER			
APPROVAL			

REVISIONS						
ZONE	LTR	ECN NO.	DESCRIPTION — FOR DETAILS SEE ECN	CHK	DATE	APPROVED
		REV A	CORRECTED ERRORS		7/31/78	PF

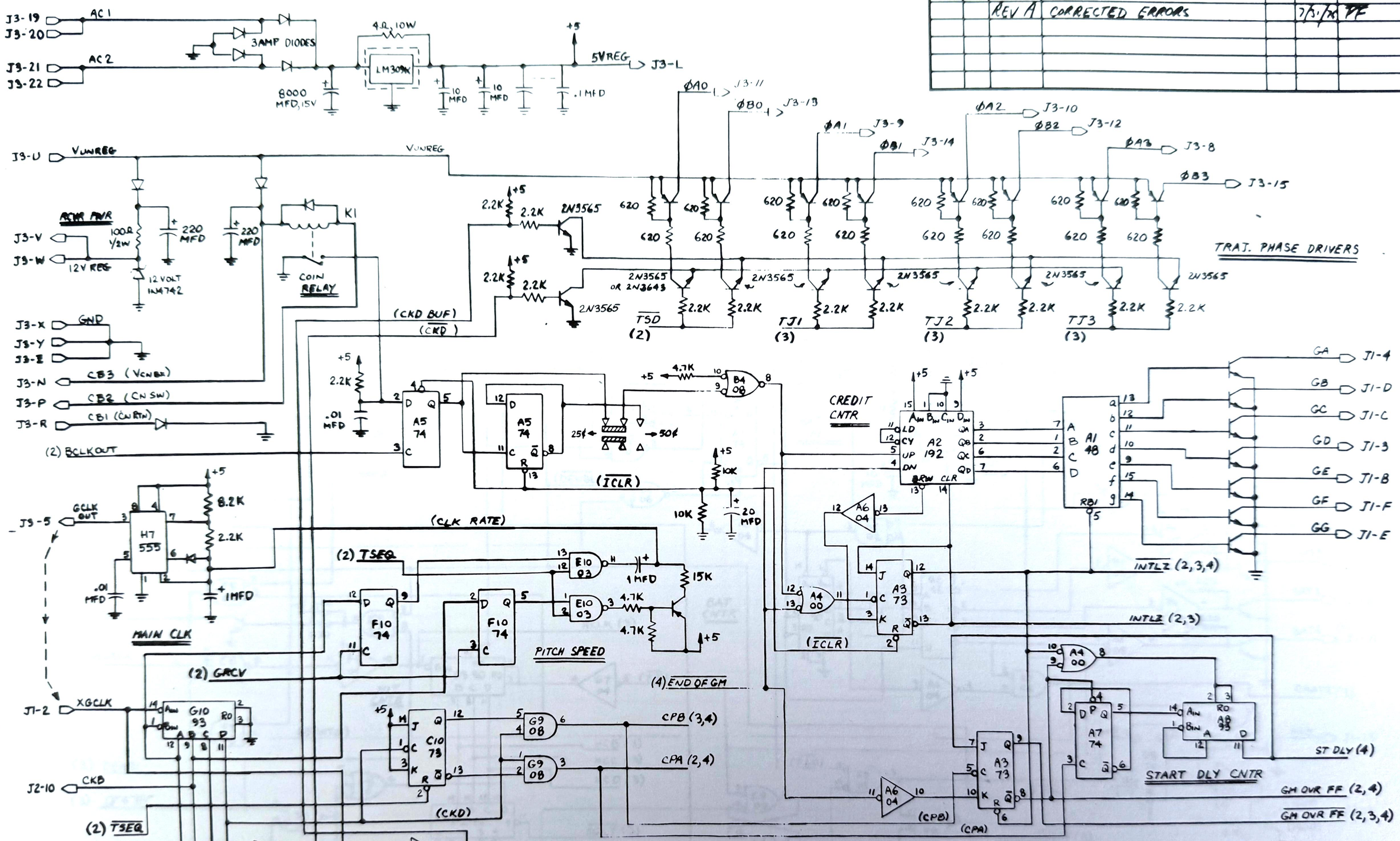

PART NO.

IDENT NO.

FOR MAT'L REQUIREMENTS SEE PL.
PL REV. LETTER CONTROLS DOCUMENT.

UNLESS OTHERWISE NOTED:

1) RESISTANCE IN OHMS, 1/4W, 5%
2) CAPACITANCE IN MFD
3) DIODES ARE 1N4001
4) NPN TRANSISTORS 2N3569 OR 2N3643 PNP'S ARE 2N4403

COMPANY CONFIDENTIAL

THIS ITEM AND/OR THE INFORMATION CONTAINED THEREIN IS AND REMAINS THE SOLE PROPERTY OF, AND IS PROPRIETARY TO, CENTURY INDUSTRIES (CI). THIS ITEM AND/OR INFORMATION SHALL BE KEPT CONFIDENTIAL AND MAY NOT BE REPRODUCED, COPIED, MODIFIED, DISCLOSED, TRANSFERRED, OR MADE AVAILABLE TO OTHERS, EXCEPT WITH THE PRIOR WRITTEN CONSENT OF CI. THIS ITEM AND/OR ALL COPIES, IF ANY, ARE SUBJECT TO RETURN TO CI.

UNLESS OTHERWISE SPECIFIED
DIMENSIONS IN INCHES TOL. ON
2 PLACE DECIMALS ± | 3 PLACE DECIMALS ± | ANGLES ±
SURFACE FINISH NOT TO EXCEED 125
REMOVE BURRS AND BREAK SHARP EDGES
MATERIAL:
THREADS: EXT. CL 2A, INT. CL 2B
COMMODITY CODE

		DATE
LAYOUT		
DRAFTSMAN	D.S.	12/12/75
CHECKER		
ENGINEER	P. Ferner	12/22/75
APPROVAL	E.C. Rotar	12/23/75

CLASS

CENTURY INDUSTRIES

TITLE LOGIC BOARD SCHEMATIC – WORLD SERIES II

SIZE	CODE IDENT NO.	DWG NO.
C		20045

SCALE — | WEIGHT | SHEET 1 OF 4

DO NOT SCALE THIS PRINT

DWG NO. 20045

PRINTED IN U.S. AMERICA, 1973

UNLESS NOTED: (1) RESISTORS ARE 1/4 W
(2) TRANSISTORS ARE 2N3569 OR 2N3643

REVISIONS						
ZONE	LTR	ECN NO.	DESCRIPTION — FOR DETAILS SEE ECN	CHK	DATE	APPROVED
		REV A	CORRECTED ERRORS		7/3/76	PF

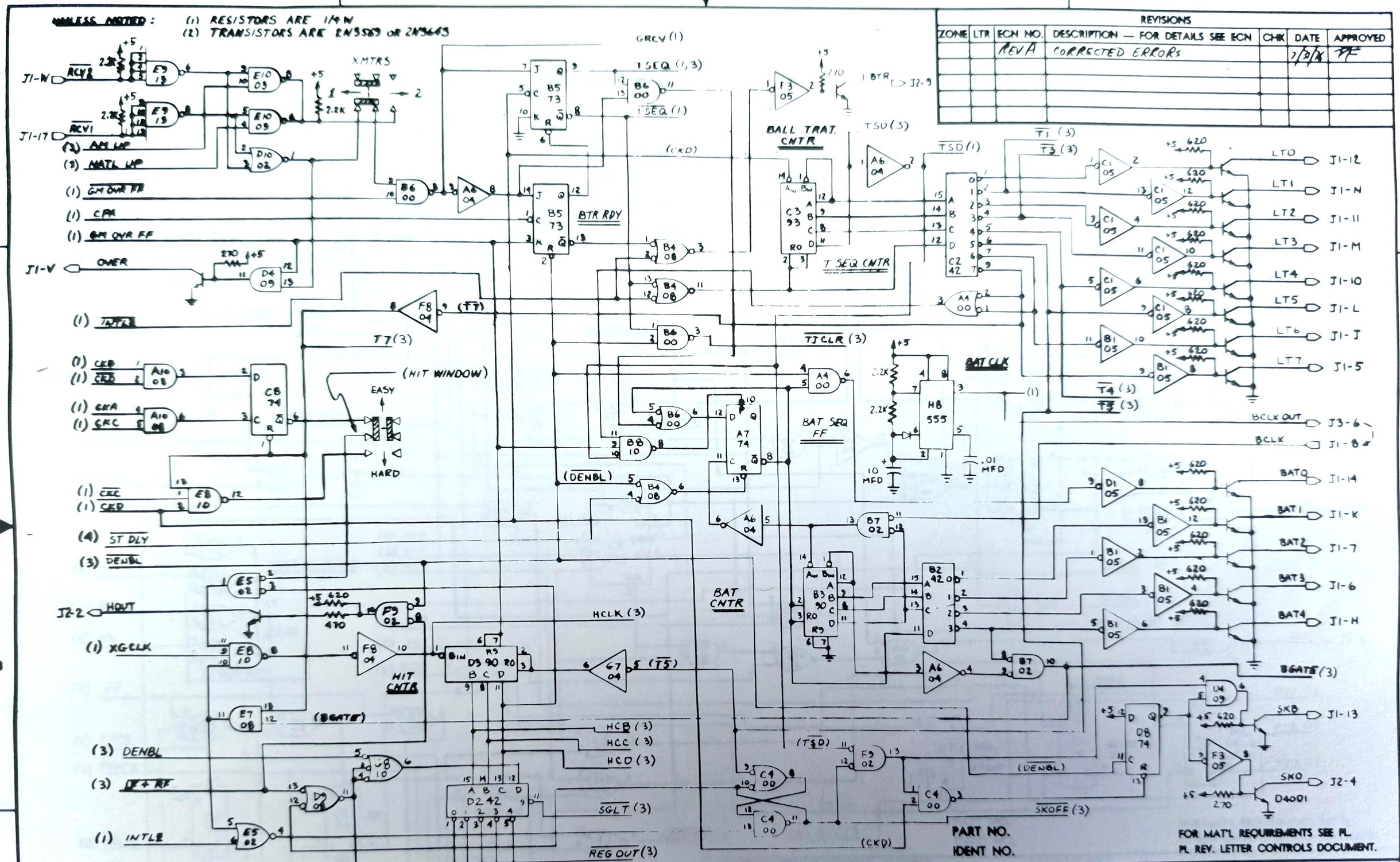

PART NO.
IDENT NO.

FOR MAT'L REQUIREMENTS SEE PL.
PL REV. LETTER CONTROLS DOCUMENT.

COMPANY CONFIDENTIAL

THIS ITEM AND/OR THE INFORMATION CONTAINED THEREIN IS AND REMAINS THE SOLE PROPERTY OF, AND IS PROPRIETARY TO, CENTURY INDUSTRIES (CI). THIS ITEM AND/OR INFORMATION SHALL BE KEPT CONFIDENTIAL AND MAY NOT BE REPRODUCED, COPIED, MODIFIED, DISCLOSED, TRANSFERRED, OR MADE AVAILABLE TO OTHERS, EXCEPT WITH THE PRIOR WRITTEN CONSENT OF CI. THIS ITEM AND/OR ALL COPIES, IF ANY, ARE SUBJECT TO RETURN TO CI.

UNLESS OTHERWISE SPECIFIED
DIMENSIONS IN INCHES TOL. ON
2 PLACE DECIMALS ± | 3 PLACE DECIMALS ± | ANGLES ±
SURFACE FINISH NOT TO EXCEED 125
REMOVE BURRS AND BREAK SHARP EDGES
MATERIAL:
THREADS: EXT. CL 2A, INT. CL 2B
COMMODITY CODE

		DATE
LAYOUT		
DRAFTSMAN	D.S.	12/12/75
CHECKER		
ENGINEER	P. Kenen	12/14/75
APPROVAL	E. C. Rolan	12/23/75

CLASS

CENTURY INDUSTRIES

TITLE
LOGIC BOARD SCHEMATIC - WORLD SERIES II

SIZE	CODE IDENT NO.	DWG NO.
C		20045

SCALE — | WEIGHT | SHEET 2 OF 4

DO NOT SCALE THIS PRINT

DWG NO. 20045

REVISIONS						
ZONE	LTR	ECN NO.	DESCRIPTION — FOR DETAILS SEE ECN	CHK	DATE	APPROVED
		REV A	CORRECTED ERRORS		1/31/76	PF

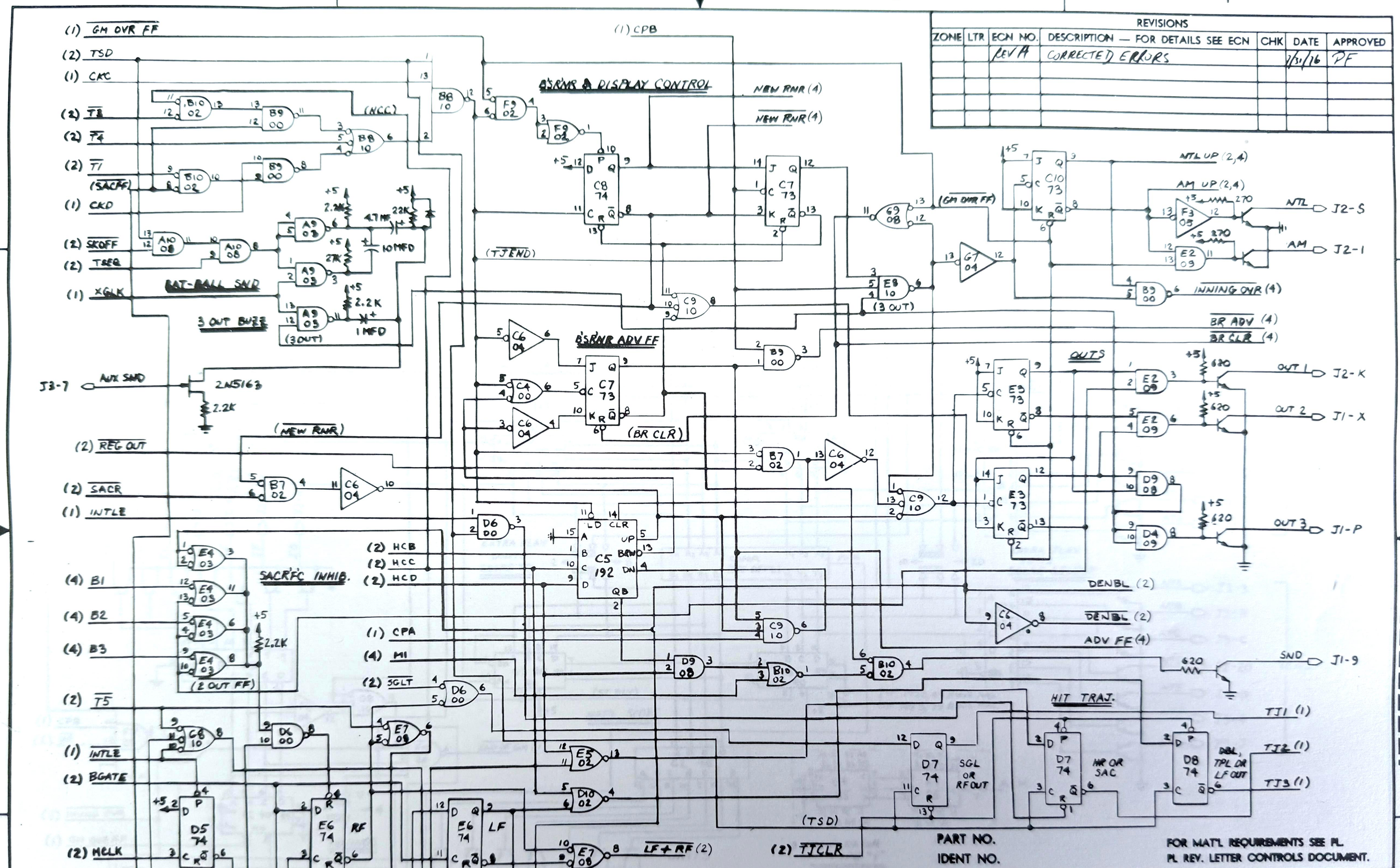

PART NO.
IDENT NO.

FOR MAT'L REQUIREMENTS SEE PL.
PL REV. LETTER CONTROLS DOCUMENT.

COMPANY CONFIDENTIAL

THIS ITEM AND/OR THE INFORMATION CONTAINED THEREIN IS AND REMAINS THE SOLE PROPERTY OF, AND IS PROPRIETARY TO, CENTURY INDUSTRIES (CI). THIS ITEM AND/OR INFORMATION SHALL BE KEPT CONFIDENTIAL AND MAY NOT BE REPRODUCED, COPIED, MODIFIED, DISCLOSED, TRANSFERRED, OR MADE AVAILABLE TO OTHERS, EXCEPT WITH THE PRIOR WRITTEN CONSENT OF CI. THIS ITEM AND/OR ALL COPIES, IF ANY, ARE SUBJECT TO RETURN TO CI.

UNLESS NOTED: (1) RESISTORS ARE 1/4W
(2) TRANSISTORS ARE 2N3569 OR 2N3613

UNLESS OTHERWISE SPECIFIED
DIMENSIONS IN INCHES TOL. ON
2 PLACE DECIMALS ± | 3 PLACE DECIMALS ± | ANGLES ±
SURFACE FINISH NOT TO EXCEED 125
REMOVE BURRS AND BREAK SHARP EDGES
MATERIAL:
THREADS: EXT. CL 2A, INT. CL 2B
COMMODITY CODE

		DATE
LAYOUT		
DRAFTSMAN	D.S.	12/12/75
CHECKER		
ENGINEER	P. Ferer	12/16/75
APPROVAL	E.C. Coltrin	12/23/75

CLASS

CENTURY INDUSTRIES

TITLE
LOGIC BOARD SCHEMATIC — WORLD SERIES II

SIZE	CODE IDENT NO.	DWG NO.
C		20045

SCALE — | WEIGHT | SHEET 3 OF 4

DO NOT SCALE THIS PRINT

DWG NO. 20045

PRINTED IN U.S. AMERICA, 1975

REVISIONS						
ZONE	LTR	ECN NO.	DESCRIPTION — FOR DETAILS SEE ECN	CHK	DATE	APPROVED
		REV A	CORRECTED ERRORS		2/31/76	P.F

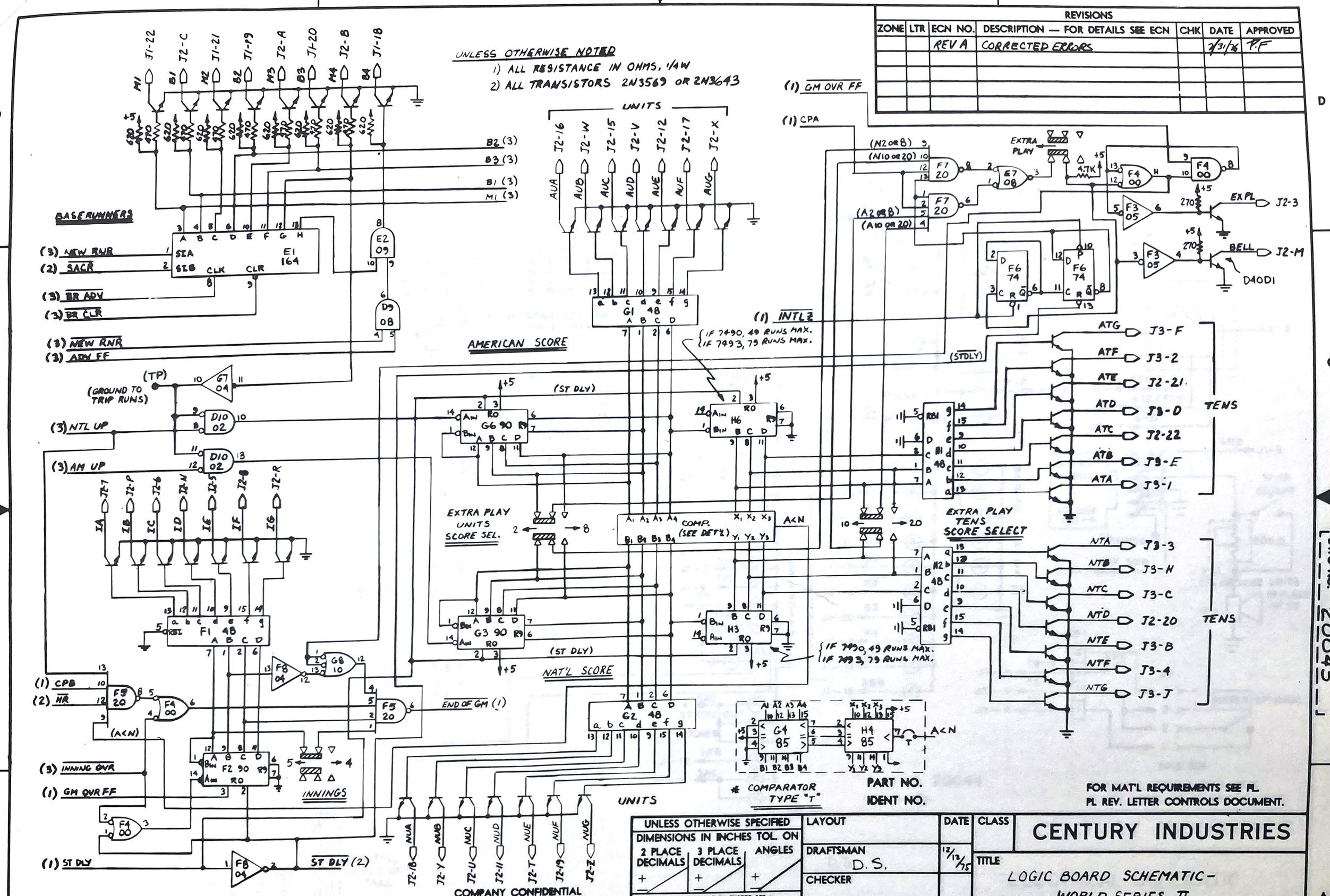

REVISIONS						
ZONE	LTR	ECN NO.	DESCRIPTION — FOR DETAILS SEE ECN	CHK	DATE	APPROVED

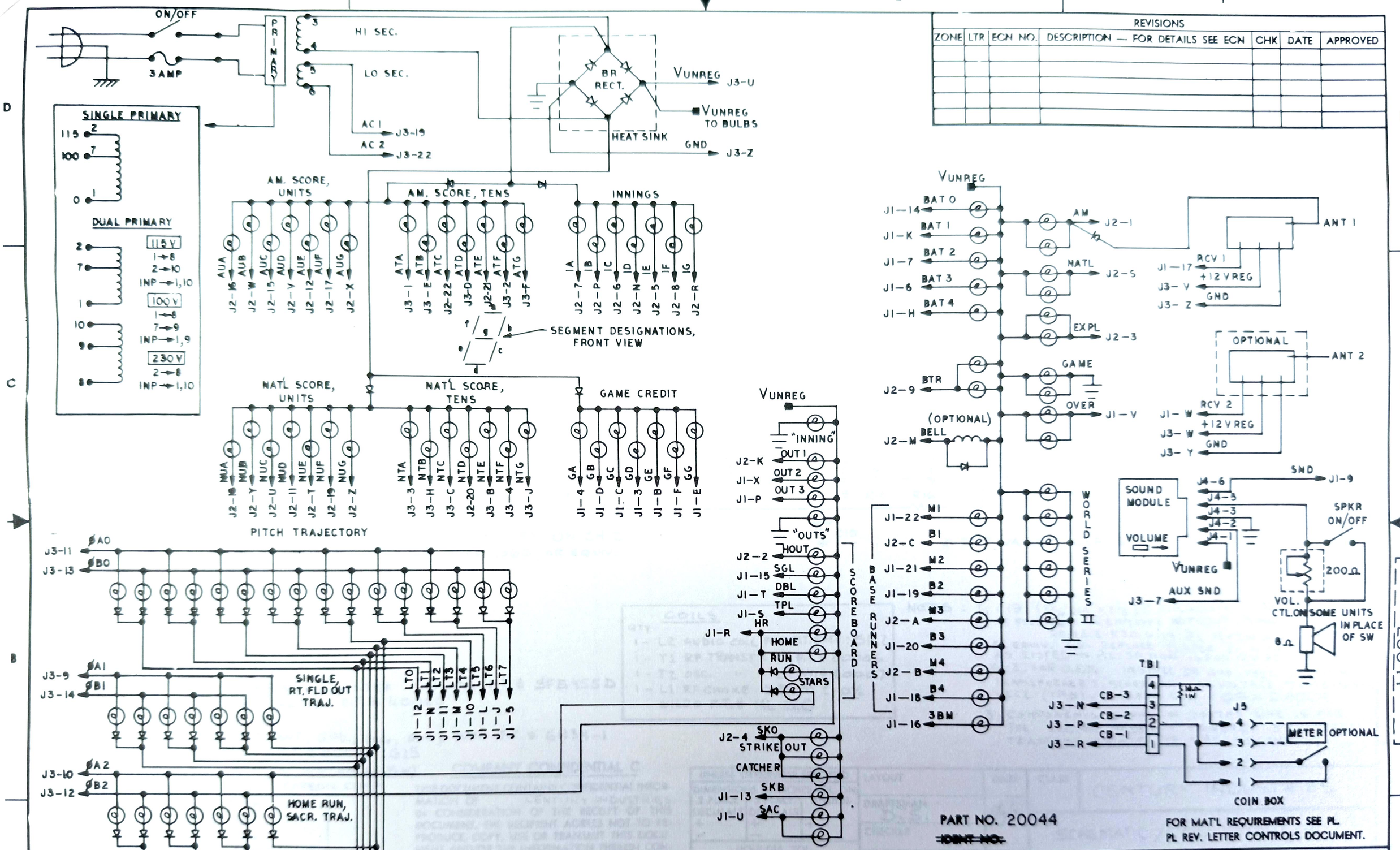

PART NO. 20044

~~IDENT NO.~~

FOR MAT'L REQUIREMENTS SEE PL.
PL REV. LETTER CONTROLS DOCUMENT.

DWG NO. 20044

COMPANY CONFIDENTIAL

THIS ITEM AND/OR THE INFORMATION CONTAINED THEREIN IS AND REMAINS THE SOLE PROPERTY OF, AND IS PROPRIETARY TO, CENTURY INDUSTRIES (CI). THIS ITEM AND/OR INFORMATION SHALL BE KEPT CONFIDENTIAL AND MAY NOT BE REPRODUCED, COPIED, MODIFIED, DISCLOSED, TRANSFERRED, OR MADE AVAILABLE TO OTHERS, EXCEPT WITH THE PRIOR WRITTEN CONSENT OF CI. THIS ITEM AND/OR ALL COPIES, IF ANY, ARE SUBJECT TO RETURN TO CI.

UNLESS OTHERWISE SPECIFIED DIMENSIONS IN INCHES TOL. ON 2 PLACE DECIMALS ± / 3 PLACE DECIMALS ± / ANGLES ±	LAYOUT	DATE	CLASS	CENTURY INDUSTRIES
SURFACE FINISH NOT TO EXCEED 125	DRAFTSMAN D. S.	12/2/75	TITLE	ELECTRICAL SCHEMATIC WORLD SERIES II
REMOVE BURRS AND BREAK SHARP EDGES	CHECKER			
MATERIAL:	ENGINEER F. J. Wuzzardo	12/4/75	SIZE C	CODE IDENT NO. / DWG NO. 20044
THREADS: EXT. CL 2A, INT. CL 2B	APPROVAL P. Fenen	12/12/75	SCALE	WEIGHT / SHEET 1 OF 1
COMMODITY CODE				

DO NOT SCALE THIS PRINT

PRINTED IN U. S. AMERICA, 1975

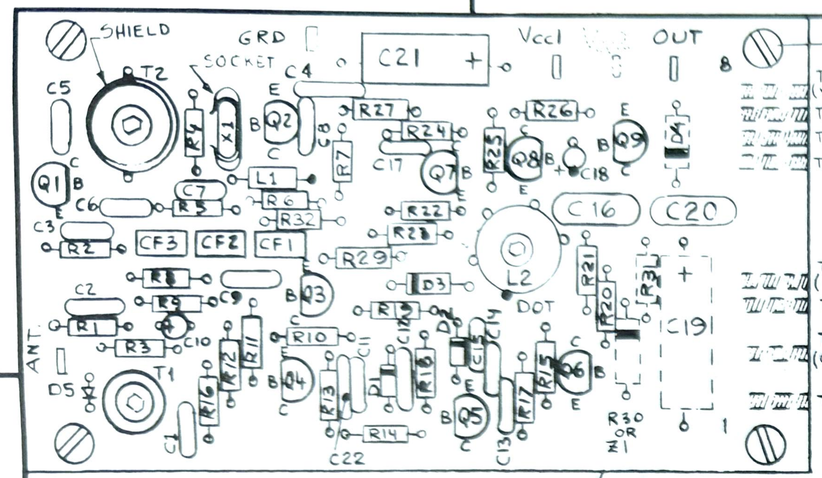

P.C. BD. CI P.T. # 21055

SCREWS - 4 PLACES - 6-32 x 1/4 IN. LG PAN HD SLOTTED, CAD. PLTD. STEEL

REVISIONS					
ZONE	LTR	DESCRIPTION	CHK	DATE	APPROVED
	A	ADDED R29, C4, C21, D4, R31. C6 WAS 75pf, C8 WAS 47pf. Q1 6.7.9 WAS 2N3711, Q2 WAS 2N5130.		MAY 16 1974	E.C. Rotan
	B	L2 WAS CI P.T. # 20008 P.C. BOARD WAS CI P.T. # 20005		JULY 8 1974	E.C. Rotan
	C	ADDED D5, R32. FOR VALUES OF C16, C13, R21, C20 & L2 SEE CHART ON SH2.		JAN 31 75	E.C. Rotan

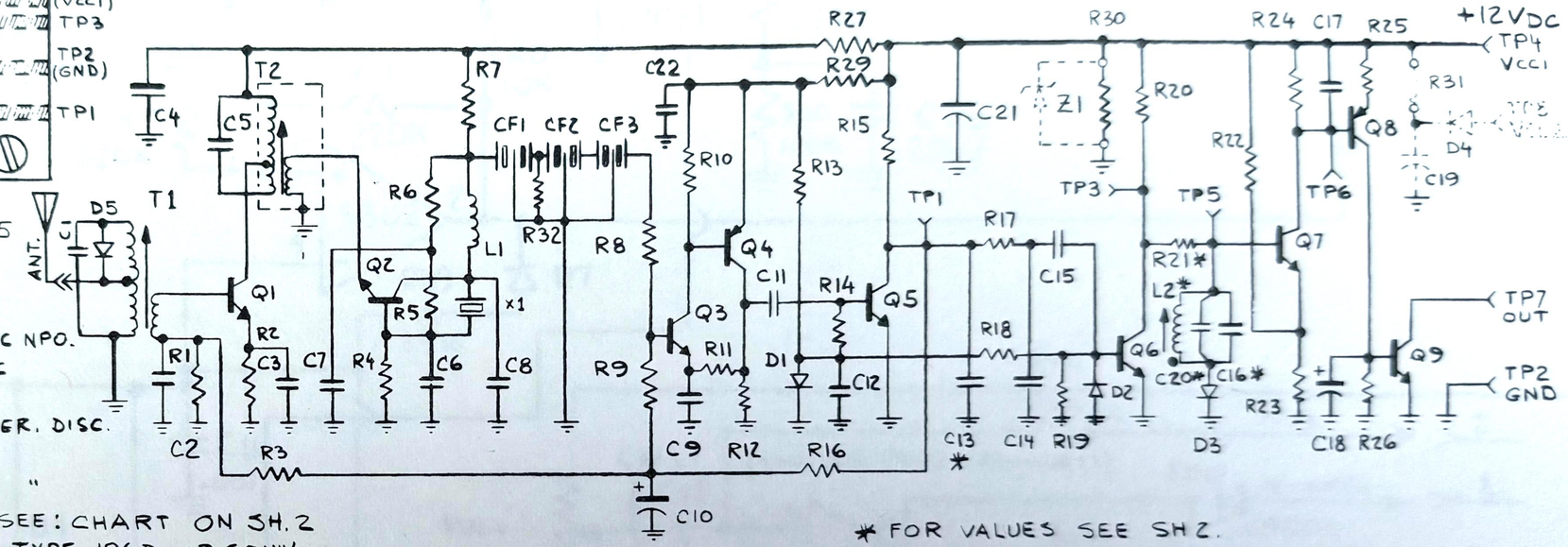

* FOR VALUES SEE SH 2.

PARTS LIST

QTY

2 - C1, C5 33 pf ± 5% 50V MIN. CERAMIC DISC NPO.
2 - C6, C8 100 pf ± 10% 50V MIN Z5U CER. DISC
1 - Z1 IN4742 ±10%, 1W ZENER (12V)
8 - C2, C3, C7, C11, C13, C14, C15, C17, .01 MFD +80-20% 50V MIN. Z5U CER. DISC.
4 - C4, C9, C12, C22, .1 MFD " " "
1 - C16, C20 CAPACITOR MYLAR ±10%, FOR VALUES SEE: CHART ON SH. 2
1 - C10, CAP. TANT. 1 MFD ±20%, 35V SPRAGUE TYPE 196D, OR EQUIV.
1 - C18, CAP. TANT. 10 MFD ±20%, 20V " "
1 - C21 CAP. ELECTROLYTIC 25 MFD DUCATTI
3 - Q6, 7, 9 2N3565
2 - Q1, 2 2N3903
2 - Q3, 5 2N3711
2 - Q4, 8, 2N4403
3 - D1, 2, 3, IN4148 OR IN914
3 - CF1, 2, 3, 455 KHz CERAMIC IF FILTER MURATA P.T. # SFB455D
1 - X1 FREQUENCY CRYSTAL CI P.T. # 40060
1 - D4 IN4002
1 - D5 IN34
4 - QUICK CONN. POST (FOR ANT., GND., Vcc1, OUT.) AMP P.T. # 61134-1
1 - SOCKET - XTAL, AUGAT P.T. # 8004-1G15
5 - R8, 17, 27, 29, 30, 1K ±10%, 1/4 W (MAYBE 1/2 W)
6 - R2, 4, 9, 10, 12, 15, 2.2K CARBON COMP.
5 - R5, 7, 11, 14, 20, 3.9K
6 - R1, 3, 6, 25, 26, 10K
2 - R16, 18, 22K
2 - R13, 19 47K
1 - R32 6.8K
1 - R24 470K CARBON COMP.
1 - R31 150Ω 1/2 WATT
RES. ±2%, 1/4 W (MAY BE 1/8 W) ±500 PPM
1 - R23, 820 Ω CARBON FILM, (DALE TYPE RL20)
1 - R22, 5.6 K

COILS

QTY

1 - L2 AUDIO COIL, FOR P.T. # SEE: SH. 2
1 - T1 RF TRANSF'R CI P.T. # 20006
1 - T2 OSC. " CI P.T. # 20007
1 - L1 RF CHOKE 2.2 UHY ± 10% WILCO P.T. # ML 22G

NOTES:
1.) C19 (7/16 DIA. x 1 1/8 LG.) ELECTROLYTIC 100 MFD 25 DCV
2.) IF RECEIVER IS EMPLOYED WITHOUT USING Vcc1, REPLACE R30 WITH Z1 12V ±10%, 1W IN4742 OR EQUIV. ALSO REPLACE JUMPER J1 WITH R31, VALUE AS LISTED IN P.L. SECTION IS FOR 12V AC APPLIED TO VCC2, FOR O.E.M. INSTALL D4 AND FEED EXTERNAL TRANSFORMER'S SECONDARY AC VOLTAGE TO TERMINAL VCC2 (TP8). INSTALL C19. Q9 = D40C4
3.) COMPONENTS SHOWN IN DOTTED LINE IS FOR THE O.E.M. MODEL - POWERED BY EXTERNAL TRANSFORMER WITH 12 VAC SECONDARY.

COMPANY CONFIDENTIAL C

THIS DOCUMENT CONTAINS CONFIDENTIAL INFORMATION OF CENTURY INDUSTRIES IN CONSIDERATION OF THE RECEIPT OF THIS DOCUMENT, THE RECIPIENT AGREES NOT TO REPRODUCE, COPY, USE OR TRANSMIT THIS DOCUMENT AND/OR THE INFORMATION THEREIN CONTAINED, IN WHOLE OR IN PART, OR TO SUFFER SUCH ACTION BY OTHERS, FOR ANY PURPOSE, EXCEPT WITH THE WRITTEN PERMISSION, FIRST OBTAINED, OF CENTURY INDUSTRIES AND FURTHER AGREES TO SURRENDER SAME TO CENTURY INDUSTRIES UPON DEMAND.

UNLESS OTHERWISE SPECIFIED			LAYOUT	DATE	CLASS	CENTURY INDUSTRIES
DIMENSIONS IN INCHES TOL. ON 2 PLACE DECIMALS ±	3 PLACE DECIMALS ±	ANGLES ±	DRAFTSMAN D.S.	2/11/74	TITLE	SCHEMATIC / COMP. LAYOUT / PL. RECEIVER
HOLE DIA. TOL. 0 THRU .250 +.003 −.002	.251 THRU .500 ±.005 −.003	501 AND LARGER ±.010 −.005	CHECKER			
THREADS: EXT. CL 2A, INT CL 2B			ENGINEER			
COMMODITY CODE			APPROVAL E.C. Rotan	3/1/74	SIZE B	CODE IDENT NO. / DWG NO. 22009
					SCALE FULL	WEIGHT / SHEET 1 OF 2

DO NOT SCALE THIS PRINT

DWG NO. 22009

DWG. NO. 20911

A

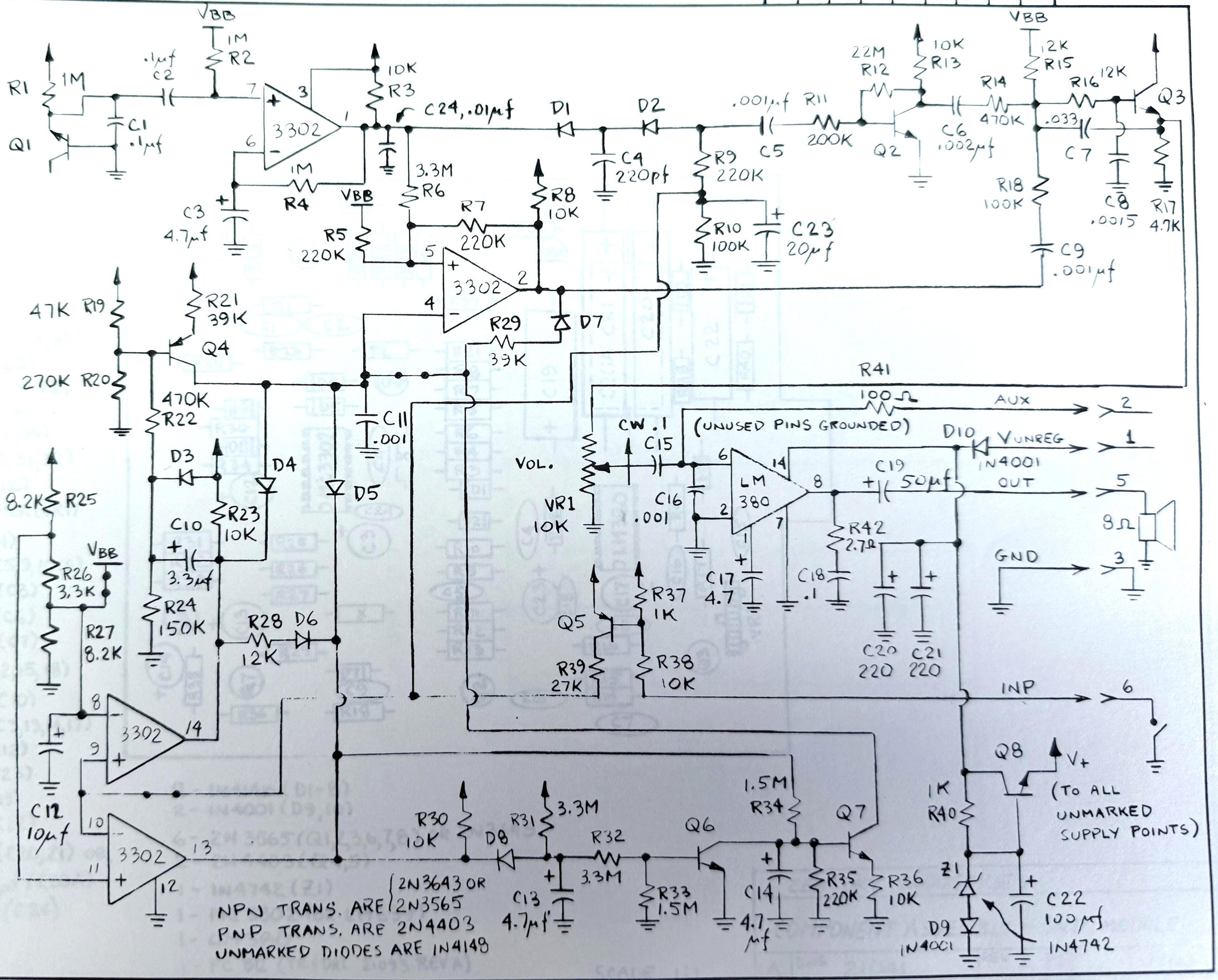

REV	DESCRIPTION	DATE	COMP. ENG.	SPECS.
EIR	REVISIONS	10/4/75		

CENTURY INDUSTRIES

SCHEMATIC — AUD. CHR. SND. MOD.

CODE IDENT NO.

SHEET 1

DWG. NO. A 20911

REV A

UD 1-705C-REV. 12-68

3 - 1Ω OR JUMPER (X)
1 - 2.7Ω (R42)
1 - 100Ω (R41)
2 - 1K (R37, 40)
1 - 3.3K (R26)
1 - 4.7K (R17)
2 - 8.2K (R25, 27)
7 - 10K (R3, 8, 13, 23, 30, 36, 38)
3 - 12K (R15, 16, 28)
1 - 27K (R39)
2 - 39K (R21, 29)
1 - 47K (R19)
2 - 100K (R10, R18)
1 - 150K (R24)
1 - 200K (R11)
4 - 220K (R5, 7, 9, 35)
1 - 270K (R20)
2 - 470K (R14, 22)
3 - 1M (R1, 2, 4)
2 - 1.5M (R33, 34)
3 - 3.3M (R6, 31, 32)
1 - 22M (R12)
1 - 10K TRIMMER (VR1)
1 - 220pf (C4)
4 - .001μf (C5, 9, 11, 16)
1 - .0015μf (C8)
1 - .002μf (C6)
1 - .033μf (C7)
4 - .1μf (C1, 2, 15, 18)
1 - 3.3μf (C10)
4 - 4.7μf (C3, 13, 14, 17)
1 - 10μf (C12)
1 - 20μf (C23)
1 - 50μf (C19)
1 - 100μf (C22)
2 - 220μf (C20, 21) OR, 1 - 500μf (C20A)
1 - .01μf (C24)

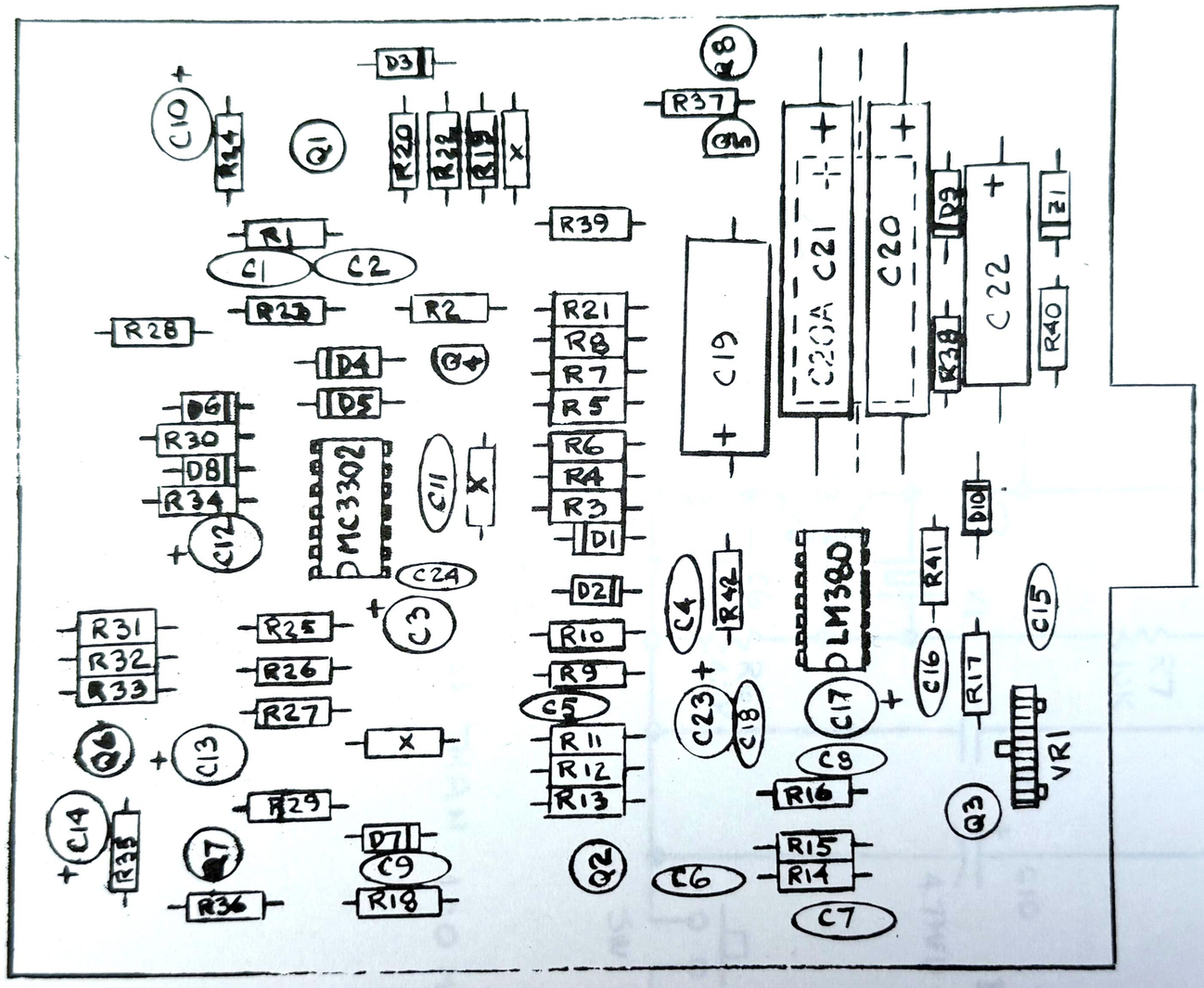

8 - 1N4148 (D1-8)
2 - 1N4001 (D9, 10)
6 - 2N 3565 (Q1, 2, 3, 6, 7, 8) OR 2N3643
2 - 2N4403 (Q4, 5)
1 - 1N4742 (Z1)
1 - MC 3302 (OR LM339)
1 - LM380
1 - PC BD. (TR. & DRL 21093 REV A)

SCALE 1:1

CENTURY INDUSTRIES				
COMPONENT ASSEMBLY - SND MODULE				
A	DWG 21041	REV A	PF	1/7/76

21041

SCHEMATIC — TRANSMITTER

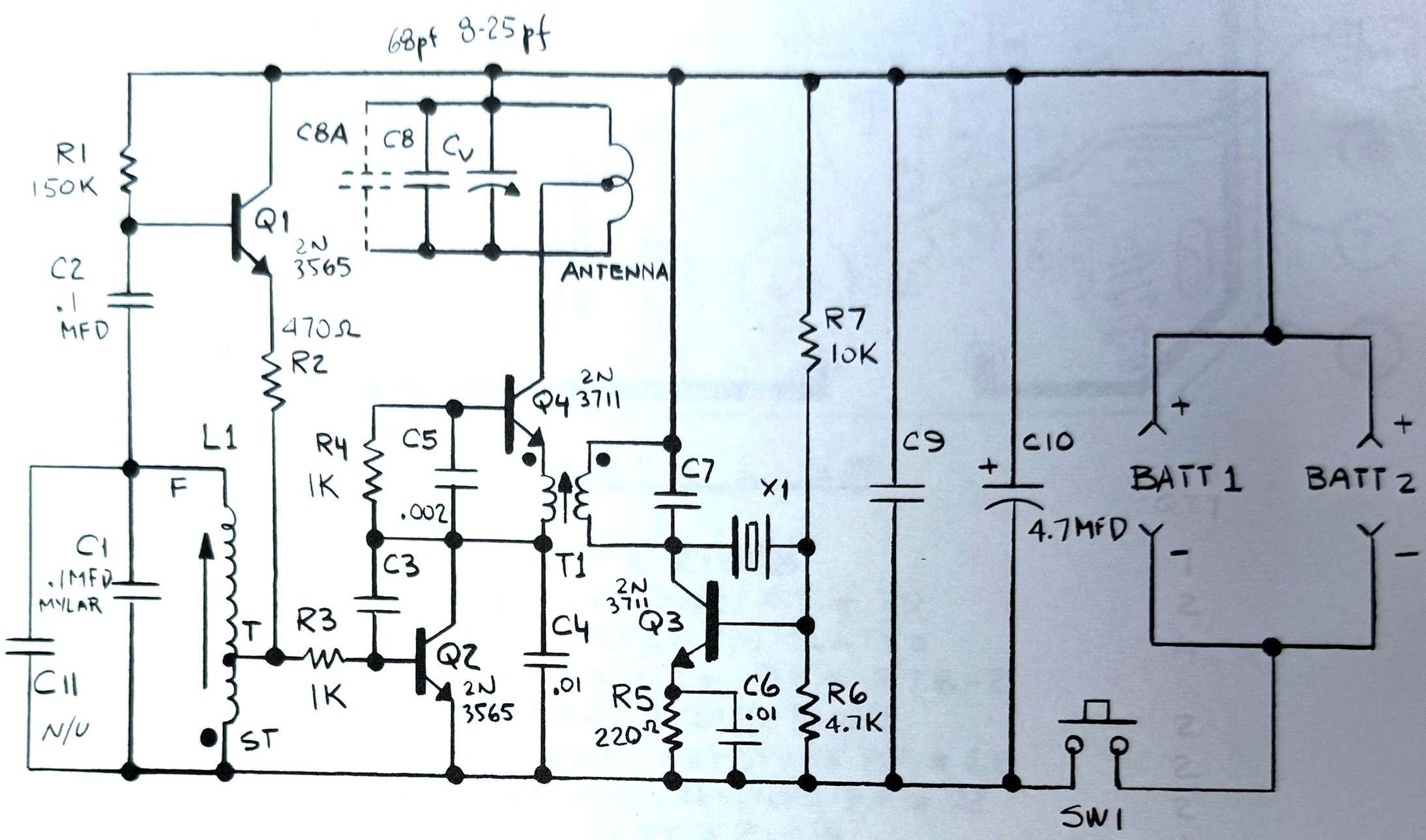

NOTE : 1.) Vcc CURRENT 22 MA TYP.
2.) RADIATED RF POWER LESS THAN 100 MW

DWG. NO. 21003

REV		DESCRIPTION	DATE	COMP. ENG.	SPECS.
REVISIONS					

CENTURY INDUSTRIES	CODE IDENT NO.	SHEET	DWG. NO. TRANSMITTER
	MAR 6 '74 E.C. Putnam	1 OF 1	21003

DWG. NO. 21015

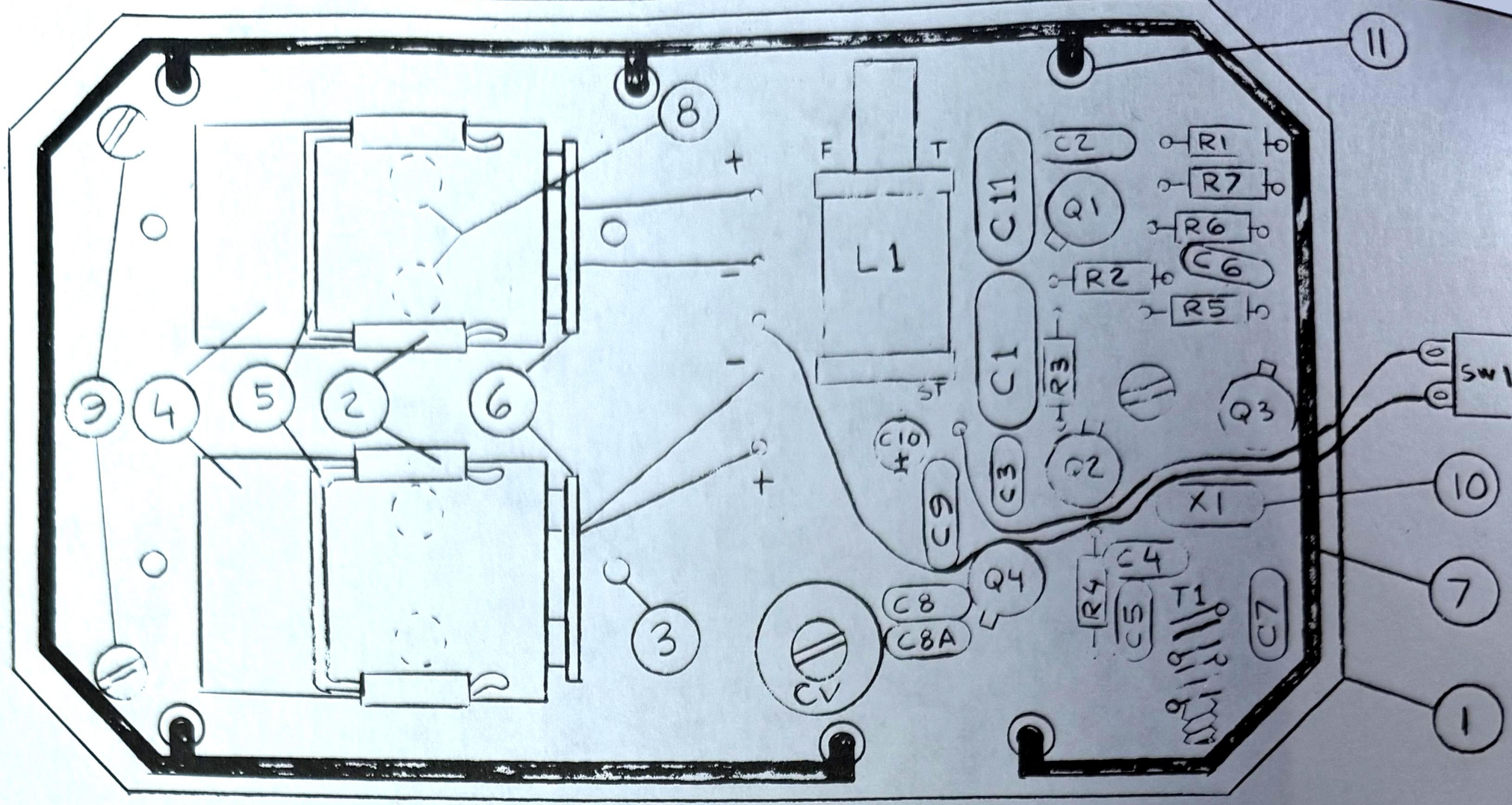

PARTS LIST

FIND #	DESCRIPTION	QTY
1	P.C. BOARD Ci P.T. # 21048	1
2	BATTRY HOLDER KEYSTONE P.T. # 79	2
3	PIN .078 IN. DIA, ELECTRO TIN PLATED MFG. BY BEAD CHAIN MFG. Co. P.T. # R78-2	4
4	BATTERY EVEREADY # 216, 9VOLT	2
5	BATTERY HOLDER CLIP, KEYSTONE P.T. # 62	2
6	BATTERY TERMINAL LEAD, KEYSTONE P.T. # 72	2
7	ANTENNA ASS'Y. Ci PART # 21014	1
8	BRASS RIVET, MFG BY CHICAGO RIVET Co P.T. # R3727 1/8 LG	4
9	SCREWS 6-32 x 1/4 LG PAN HD. SLOTTED CAD. PLTD STEEL	3
10	CRYSTAL SOCKET AUGAT P.T. # 8004-1G15	1
X1	XTAL Ci P.T. # 40050	1
11 & 8	SWAGE EYELETS KEYSTONE # 34	10

REV. "C" MAR 17-76 E.C. Fitton

IDENT NO.

UNLESS OTHERWISE SPECIFIED DIMENSIONS IN INCHES	PURCHASED PART DRAWING	CLASS	CENTURY INDUSTRIES
TOL. ON	SPECS. / DATE	TITLE	COMPONENT LAYOUT & PARTS LIST TRANSMITTER
.XX DECIMALS ±	DES. ENG. E.C. Fitton / 7/8/74		
.XXX DECIMALS ±	COMP. ENG.	SIZE A / CODE IDENT NO.	DWG NO. 21015
ANGLES ±	INITIAL	COMMODITY CODE	SHEET 1 OF 3

B C