Speedway
PRODUCTS, INC.

MINICYCLE OWNERS MANUAL

Welcome...

we at SPEEDWAY PRODUCTS would like to thank you for selecting a SPEEDWAY MINICYCLE.

Your SPEEDWAY MINICYCLE represents precision workmanship and distinctive styling . . . . . that it has been built with care and dedication . . . . and it offers all the quality, safety, and reliability you expect from Speedway.

To get the most enjoyment from your new Minicycle we suggest you familiarize yourself with the contents of this manual and follow its outlined recommendations.

SPEEDWAY. Jazzy looks. Power choices. Color options. Superb detailing. Extra quality. Accessories. Kind of makes you wonder why it's taken you so long to find THE BETTER WAY.

SPEEDWAY PRODUCTS, INC. • 160 E. LONGVIEW AVE. • MANSFIELD, OHIO 44905
DIVISION OF TAYLOR METAL PRODUCTS

P.N. 11540

PRINTED IN U.S.A.

TABLE OF CONTENTS

SPEEDWAY SPECIFICATIONS

	SUPER SPYDER	GREEN HORN	WIDOW MAKER	RED BARON	BLUE ANGEL	SCORPION	SCARAB	BLACK SHADOW	SHRIKE	SABRE
Engine	Sachs 125 c.c. Two Stroke	Tecumseh 198 c.c. Four Stroke	Sachs 80 c.c. Two Stroke	Tecumseh 172 c.c. Four Stroke	Tecumseh 172 c.c. Four Stroke	Tecumseh 172 c.c. Four Stroke	Tecumseh 172 c.c. Four Stroke	Sachs 80 c.c. Two Stroke	Tecumseh 127 c.c. Four Stroke	Tecumseh 127 c.c. Four Stroke
Drive	5 Speed Gear Box	Torque Converter	Torque Converter	Torque Converter	Torque Converter	Torque Converter	Torque Converter	Torque Converter	Torque Converter	Torque Converter
Front Suspension	Hydra Ride	Hydra Ride	Hydra Ride	Hydra Ride	Hydra Ride	Hydra Ride	Hydra Ride	Hydra Ride	Hydra Ride	———
Rear Suspension	H.D. Shocks	H.D. Shocks	H.D. Shocks	H.D. Shocks	H.D. Shocks	H.D. Shocks	H.D. Shocks	H.D. Shocks	H.D. Shocks	———
Drive Chain	40 H.D. Roller	40 H.D. Roller	40 H.D. Roller	40 H.D. Roller	40 H.D. Roller	40 H.D. Roller	40 H.D. Roller	40 H.D. Roller	40 H.D. Roller	40 H.D. Roller
Lighting System	———	12 Volt	———	12 Volt	———	12 Volt	———	———	———	———
Wheels	16" Wire	14" Wire	14" Wire	14" Wire	14" Wire	10" Mags	10" Mags	10" Mags	10" Mags	10" Mags
Front Brake	Internal Drum	Internal Drum	Internal Drum	Internal Drum	Internal Drum	Disc	Disc	Disc	———	———
Rear Brake	Internal Drum	Internal Drum	Internal Drum	Internal Drum	Internal Drum	Internal Drum	Internal Drum	Internal Drum	Internal Drum	Internal Drum
Tires	3.50x16"	3.50x14"	3.50x14"	3.50x14"	3.50x14"	3.50x10"	3.50x10"	3.50x10"	3.50x10"	3.00x10"
Fenders	Chrome	Chrome	Chrome	Chrome	Chrome	Chrome	Chrome	Chrome	Chrome	———
Drive Cover	———	Chrome	Chrome	Chrome	Chrome	Chrome	Chrome	Chrome	Chrome	Chrome
Handlebars	Chrome Fold Down	Chrome Fold Down	Chrome Fold Down	Chrome Fold Down	Chrome Fold Down	Chrome Fold Down	Chrome Fold Down	Chrome Fold Down	Chrome Fold Down	Rigid
Kickstand	Chrome	Chrome	Chrome	Chrome	Chrome	Chrome	Chrome	Chrome	Chrome	———
Fuel Tank	1.5 Gal.	1.5 Gal.	1.5 Gal.	1.5 Gal.	1.5 Gal.	1 Gal.	1 Gal.	1 Gal.	1 Gal.	1 Gal.
Foot Pegs	Retractable	Retractable	Retractable	Retractable	Retractable	Retractable	Retractable	Retractable	Retractable	Rigid
Exhaust	Tuned	Painted	Chrome	Painted	Painted	Painted	Painted	Chrome	Painted	Painted
Wheel Bearings	Sealed	Sealed	Sealed	Sealed	Sealed	Sealed	Sealed	Sealed	Sealed	Sealed
Frame	Wish Bone	Wish Bone	Wish Bone	Wish Bone	Wish Bone	Wish Bone	Wish Bone	Wish Bone	Wish Bone	Wish Bone
Ignition Kill	Handlebar Mounted	Handlebar Mounted	Handlebar Mounted	Handlebar Mounted	Handlebar Mounted	Handlebar Mounted	Handlebar Mounted	Handlebar Mounted	———	———
Horn	———	Electric	———	Electric	———	Electric	———	———	———	———
Wheel Base	43.5"	42.0"	42.0"	42.0"	42.0"	40.5"	40.5"	40.5"	40.5"	40.5"
L.O.A.	66.5"	63.75"	63.75"	63.75"	63.75"	57.50"	57.50"	57.50"	57.50"	57.50"
Seat Height	30.5"	27.75"	27.75"	27.75"	27.75"	27.25"	27.25"	27.25"	26.50"	25.75"
Color	Sunburst Yellow	Grabber Green	Midnight Black	Candy Red	Bahama Blue	Candy Red Bahama Blue Grabber Green	Candy Red Bahama Blue Grabber Green	Midnight Black	Competition Red	Bahama Blue
Weight	160 Lbs.	125 Lbs.	120 Lbs.	125 Lbs.	120 Lbs.	112 Lbs.	107 Lbs.	107 Lbs.	100 Lbs.	95 Lbs.

SECTION 2
GENERAL INFORMATION

A. WARRANTY

1. Warranty – SPEEDWAY PRODUCTS, INC. warrants each SPEEDWAY MINICYCLE to be free from defects in material or workmanship for a period of (90) days from the date of purchase. This warranty applys only to the original owner and is not transferable.

2. Warranty Registration – The owner's registration card supplied in the owners manual must be filled out completely and returned within 10 days from date of purchase in order to obtain warranty service.

3. Warranty Claims – All claims under this warranty must be made through an authorized SPEEDWAY PRODUCTS DEALER. SPEEDWAY PRODUCTS will not honor a warranty claim unless the owner's registration card has been received at the Speedway Products, Inc. factory.

4. Defective Parts – During the warranty period warranted parts found to be defective in workmanship or material will be either replaced or repaired at the option of SPEEDWAY PRODUCTS, INC.

5. Labor Charge – The labor performed by any SPEEDWAY PRODUCTS DEALER to repair or replace defective parts in not the responsibility of SPEEDWAY PRODUCTS, INC.

6. Transportation Charges – SPEEDWAY PRODUCTS, INC. shall not be responsible for any transportation charges on any parts under this warranty.

7. Warranty Exclusions – This warranty shall not apply to:

A. Engines, as they are subject to the warranty of the engine manufacturer.

B. Normal wear and maintenance items such as tires, innertubes, torque converter belts, drive belt rollers and retainers, brake shoes, light bulbs and lenses, throttle and brake cables, drive chains, sprockets and tune ups or adjustments.

C. This warranty shall not apply to SPEEDWAY MINICYCLES that have been:

1. Used for racing.
2. Repaired by anyone other than an authorized Speedway Products Dealer.
3. Involved in an accident or subject to misuse or neglect.
4. Modified in anyway for increased performance.

8. Entire Warranty – The terms and conditions herein consist of the entire warranty of SPEEDWAY PRODUCTS, INC. on SPEEDWAY MINICYCLES and no other written or oral representation made by any agent, sales personnel or other representatives will be binding on SPEEDWAY PRODUCTS, INC.

B. WARRANTY PROCEDURE

All claims under the Speedway warranty must be made through an authorized Speedway Products Dealer and must be within the (90) ninety warranty period. To obtain warranty service the owner must return the minicycle to the dealer for his inspection and repair. Under no circumstances are defective parts to be returned to the factory by the owner.

C. WARRANTY REGISTRATION

Included in this owners manual are owner's registration cards for you to fill out and return. It is necessary that these cards be returned for warranty purposes. Your local Speedway Products Dealer will be most happy to help you complete these cards.

Please do not jeopardize your warranty by neglecting or putting off the return of these cards. You must return these cards within 10 days from the date of purchase.

D. SERIAL NUMBERS

Each Speedway Minicycle has a chassis number and an engine number. The chassis number is stamped into the chassis directly in front of the fuel tank. The engine number is located on a plate which is riveted on the front side of the engine flywheel cover.

Chassis Number	39614
Engine Number	2104B
Model	RED BARON
Date of Purchase	6-6-73
License Plate No. (If Licensed)	

SECTION 3
SPEEDWAY CONTROLS

4. H. P

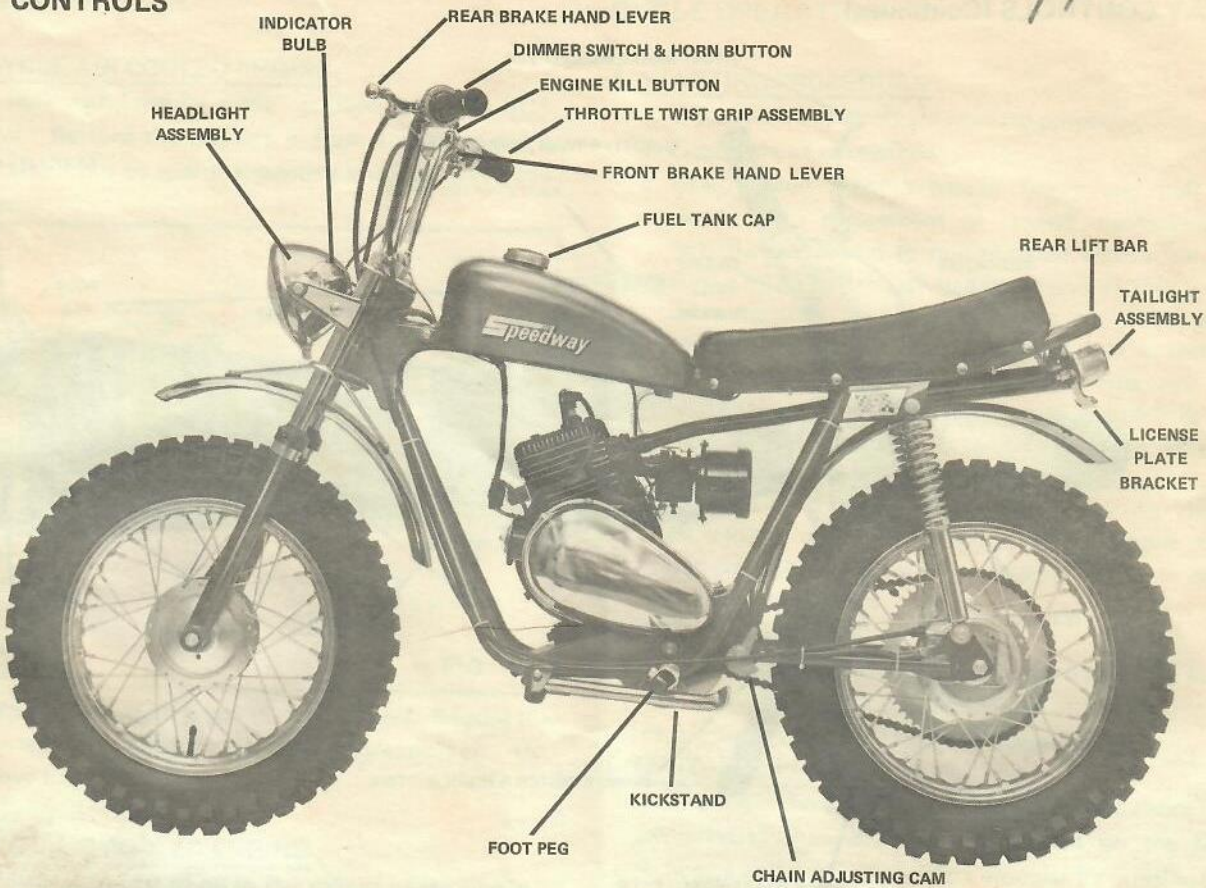

SECTION 3
SPEEDWAY CONTROLS (Continued)

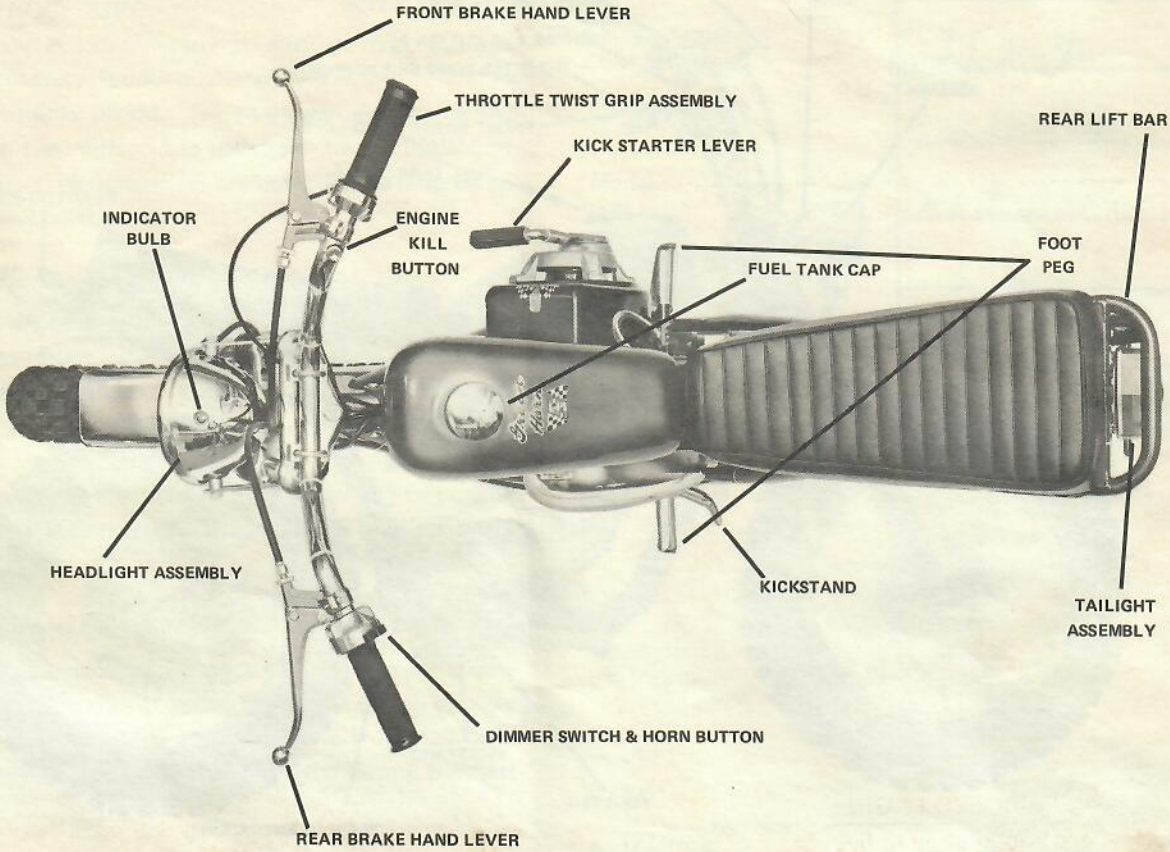

SECTION 4
FUEL MIXING

A. FOUR – CYCLE AIR COOLED ENGINE

1. Fill fuel tank with "regular grade" gasoline only. Do NOT mix with oil. Be sure the gasoline is fresh and container is clean. Be careful not to spill the gasoline and wipe away any that is spilled.

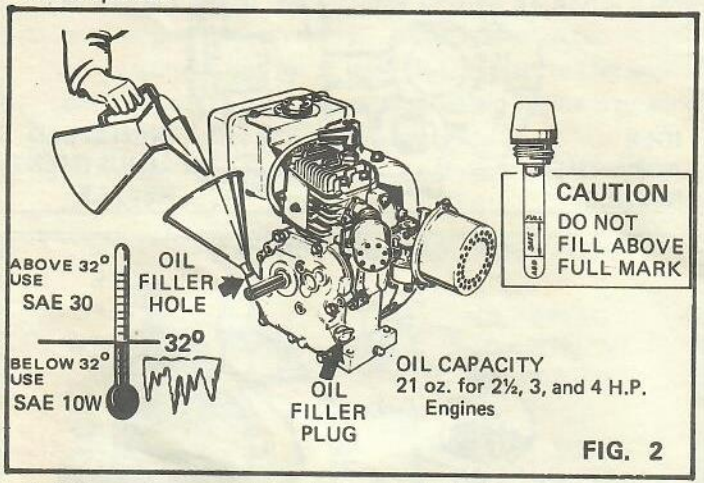

FIG. 2

2. Fill crankcase with fresh clean (S.A.E. 30) oil. Be sure the cycle is sitting level and fill slowly to avoid trapping air. Do NOT fill above full mark.

B. TWO – CYCLE AIR COOLED ENGINE

1. Thoroughly mix 1 quart of oil to five gallons of gasoline in a clean separate container. Measure gasoline and oil accurately.

SECTION 5
CYCLE OPERATION

A. STARTING PROCEDURE

1. Make sure all controls are working properly.
2. Engage choke as required.
3. Grasp recoil starting handle firmly and pull outward slowly until engagement of ratchet mechanism can be felt, then continue to pull outward with a full, vigorous stroke. Do not release handle at end of stroke and allow cable to snap back. Retain grip on handle and allow cable to rewind slowly. Do not pull rope to end of travel. Return choke to open position after two pulls of recoil starter to avoid engine flooding. If engine does not start immediately, allow engine to come to a complete stop before engaging starter again.
4. When engine starts, return choke lever to "NORMAL RUNNING" position. If engine falters, actuate choke. Do not use choke when starting a warm engine, or carburetor flooding may occur.

B. BREAK–IN PERIOD

1. It is recommended that full throttle be avoided for the first five (5) hours and substained periods of full throttle be avoided for the first ten (10) hours of operation.

C. SHUT–OFF PROCEDURE

1. The engine on all models except Shrike and Sabre is stopped by pressing the "Kill" button located on the handlebar.
2. Shrike and Sabre models are stopped by pressing the shorting clip, located on the engine, against the spark plug wire boot.

SECTION 6
MAINTENANCE

A. ENGINE

1. Check the engine periodically and re-tighten any loose engine base mounting screws, air cleaner cover mounting screws and other exposed hardware.
2. The air cleaner should be removed frequently and tapped lightly against a solid surface which will dislodge loose dirt accumulation. Never run the engine without the filter in place or with a filter that has been punctured.
3. Keep the head and cylinder fins clean. Your air cooled engine will operate efficiently only if kept clean.
4. On four cycle engines, after the first two tanks of gasoline have been consumed, drain the oil and refill with fresh oil (S.A.E. 30). Check the oil level frequently between changes It is recommended that the oil be changed every 25 hours of operation.

B. CARBURETOR ADJUSTMENT

The carburetor has been adjusted for maximum performance at the factory, but may be re-adjusted if necessary. Block the cycle up so rear wheel is free and proceed as follows:

A. Four cycle engines

1. Close "highspeed adjustment needle" FINGER TIGHT ONLY by turning clockwise. Do NOT force as this will damage carburetor internal seat. Open needle (counter clockwise) 1 3/4 turn.

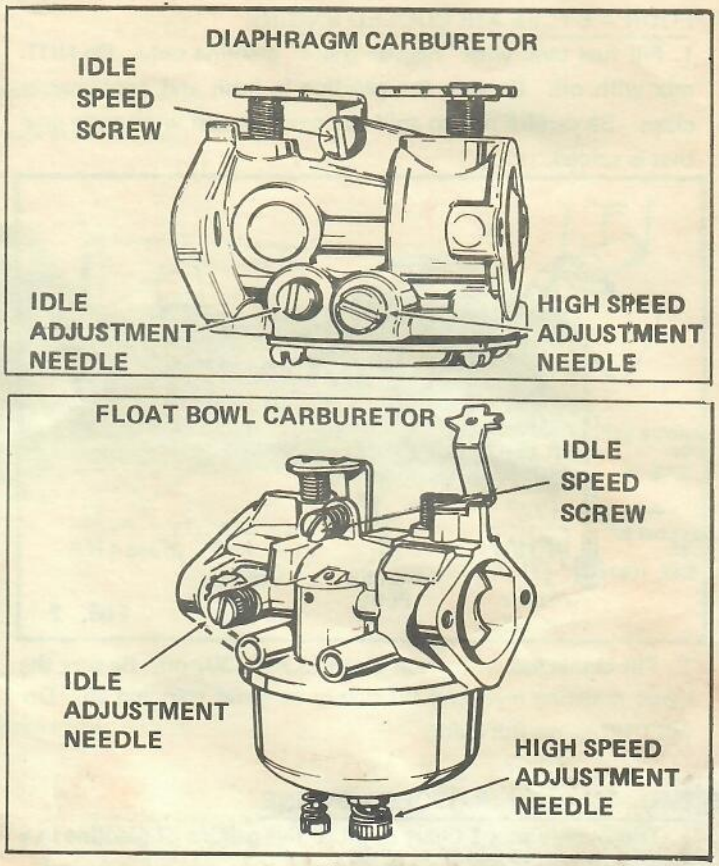

FIG. 3

2. Close "idle adjustment needle" FINGER TIGHT ONLY by turning clockwise. Open needle 5/8 turn.

3. Start engine and bring to operating-temperature.

4. With engine running at full throttle adjust "high speed adjustment needle" backward or forward 1/8 turn at a time until engine runs smoothly. Allow engine to run at each new needle setting for at least (10) seconds to give engine time to react to each new setting. When engine is running smoothly, correct setting has been reached.

5. Adjust "Idle Speed Screw" until desired idling speed is obtained.

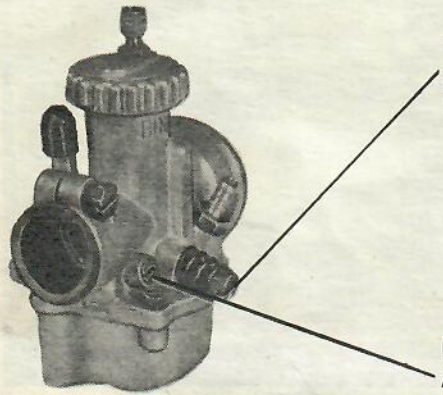

FIG. 4

B. Two cycle engine

1. Start engine and bring to operating temperature.

2. Screw in the "idle speed adjustment needle" until engine runs at increased idling speed. (Fig 4)

3. Close "idle adjustment screw". Open until engine runs smoothly. (Approximately two turns).

4. Screw out the "idle speed adjustment needle" until desired idling speed is obtained.

C. TORQUE CONVERTER

A. Drive Converter Lubrication

1. Remove torque converter guard.

2. Loosen and remove the center screw, drive cover, moveable drive sheave, drive spring belt roller and belt roller retainer. (Fig. 5)

3. Apply a few drops of clean oil to the inside surface of the belt roller. Slide belt roller and belt roller retainer together. Wipe excess oil away as it may drip on to the drive sheaves, causing belt slippage.

4. Reassemble entire unit in reverse order.

NOTE: Check belt roller lubrication every 10 hours of operation.

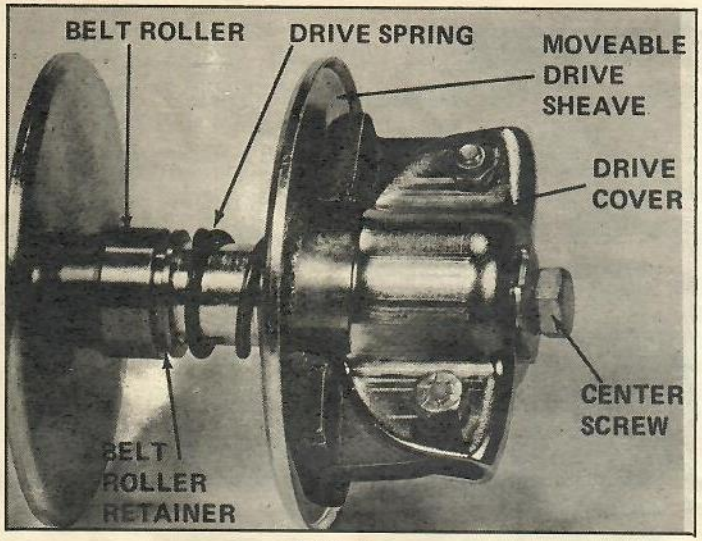

FIG. 5

B. Driven Converter Lubrication

The occasional application of several drops of oil on the fixed driven shaft (Fig 6) is necessary for long life.

Approximately every 100 hours the nylon wear plugs in the actuating hub must be replaced as follows (Fig 7):

1. Using both hands, hold the fixed driven sheave and rotate the moveable driven sheave toward you. This will allow the sheaves to open up.
2. Hold flanges open and, using a small punch, insert into each hole on the actuating hub ramp and knock out each wear plug.
3. Insert new wear plug.
4. To remove driven converter, follow steps 1 through 5 under Drive Belt Replacement.

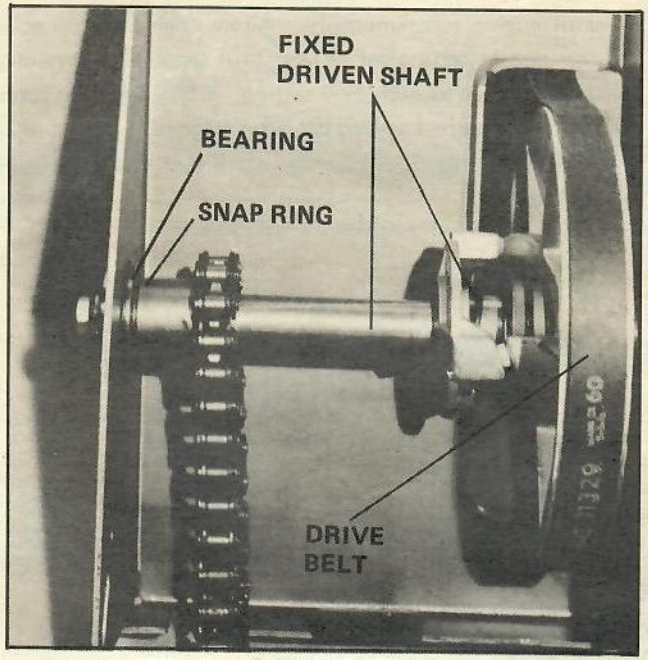

FIG. 6

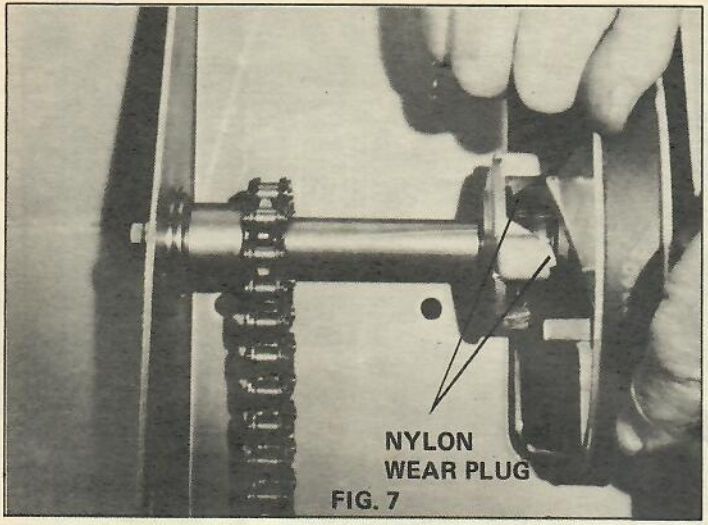

FIG. 7

D. DRIVE BELT

The drive belt requires no maintenance with the exception of the application of belt dressing if slipping occurs. When the belt wears to 1/2" width, it should be replaced as follows:

1. Remove torque converter guard.
2. Using snap ring pliers, remove the snap ring on the bearing closest to the drive sprocket and remove the bearing from the shaft (Fig 6).
3. Slide entire unit toward side where bearing was removed. This will allow other bearing to drop from hole.
4. Remove old drive belt by slipping over both the driven and drive sheaves.
5. Reassemble in reverse order.

E. DRIVE CHAIN

Because the chain has many parts that rub against one another, it is prone to wear if not maintained. Without lubrication, a chain can wear out within 100 miles. Develop a habit of servicing the chain on a regular schedule. This is important since you will spend the major portion of your time riding in the dirt where dust and dirt can readily work into the chain links.

1. LUBRICATION—There are several lubricants available. Use a rag to wipe off any accumulation of dirt, then apply a liberal amount of lubricant on the chain at least every 100 miles.
2. CLEANING—The chain has to be removed periodically from the machine and soaked in cleaning solvent. Completely soak the chain with solvent to remove as much dirt as possible. Drain and dry the chain thoroughly. Immediately after the chain has dried completely, lubricate to prevent rust.

CAUTION: Do NOT use flammable solvents in an unventilated area. Follow solvent manufacturers recommendations.

Keep the chain adjusted so there is approximately 1/2" to 3/4" deflection when depressed with your thumb (Fig 8).

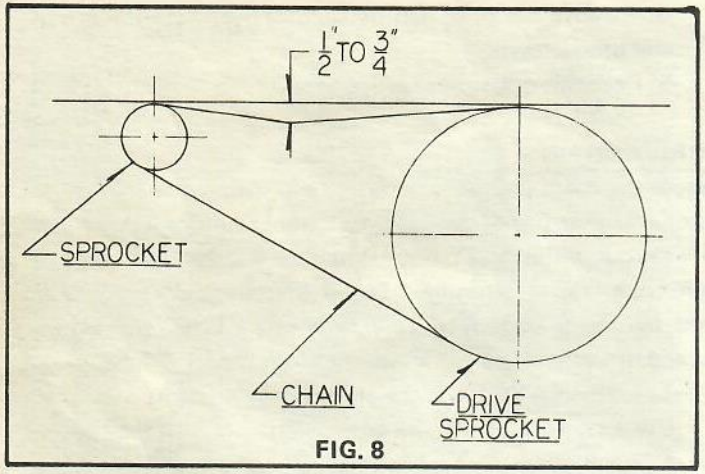

FIG. 8

3. ADJUSTMENT

A. On all models except Shrike and Sabre the drive chain is adjusted by loosening the two swing arm pivot screws, located on either side of the swing arm assembly, and rotating the tab on the adjusting cams until proper chain tension is obtained (Fig 9). Both adjusting cams must be adjusted equally to insure proper wheel alignment.

B. On Shrike and Sabre models the drive chain is adjusted by loosening the rear axle bolt and adjusting the rear wheel until proper chain tension is obtained (Fig 10). Both sides of the rear wheel must be adjusted equally to insure proper wheel alignment.

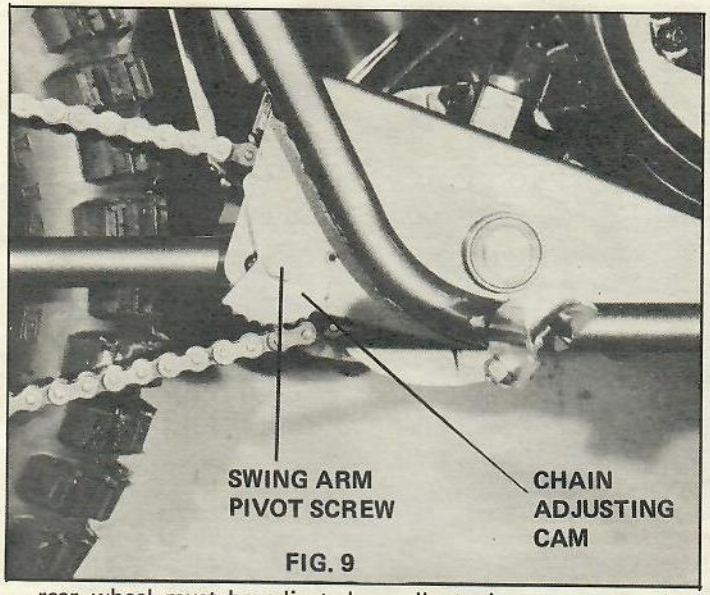

FIG. 9

F. PIVOT ROD

It is recommended that the Pivot Rod be removed, cleaned and lubricated periodically in order to keep the swing arm operating properly.

1. Loosen and remove the two swing arm pivot screws and chain and adjusting cams.

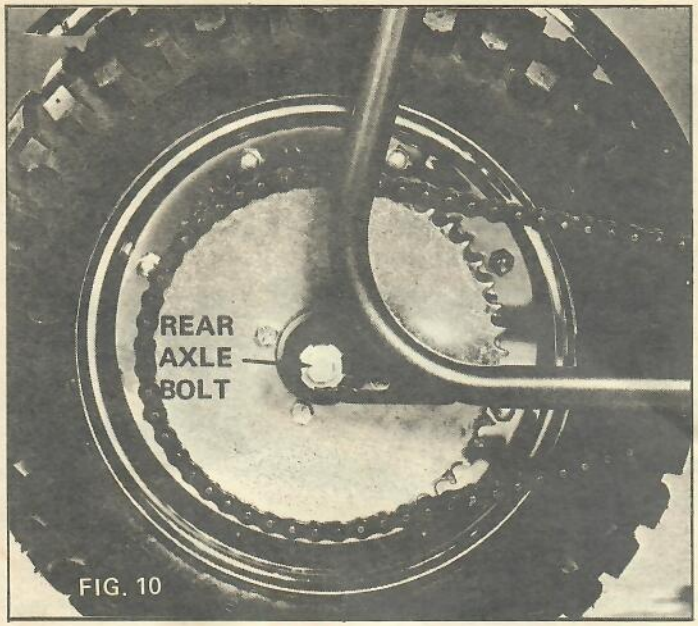

FIG. 10

2. Insert forefinger in swing arm tube and apply pressure. Pivot Rod will be forced out other end.
3. Soak Pivot Rod in cleaning solvent. Dry completely and apply a liberal amount of lubricant.
4. Assemble in reverse order.

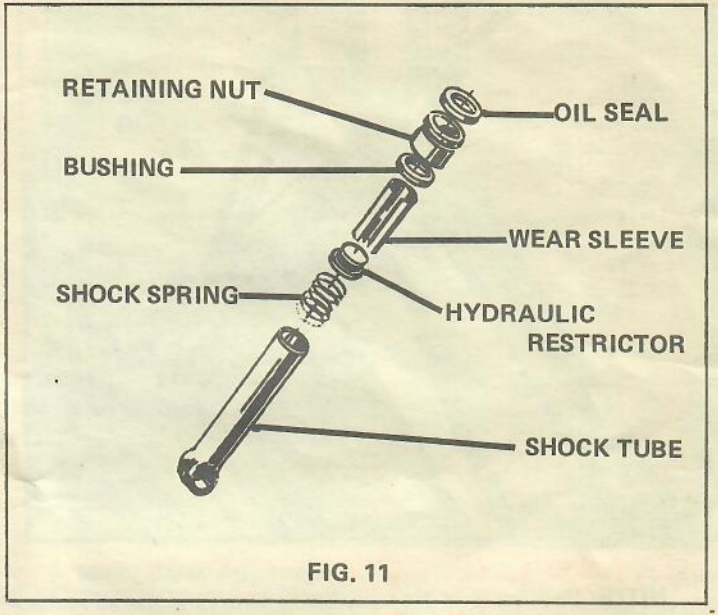

FIG. 11

G. FRONT SUSPENSION

The front suspension is a Speedway exclusive that uses oil to eliminate bottoming during rough riding. Every 100 hours the hydraulic oil should be changed as follows:

1. Remove the front tire and wheel assembly.
2. Using a spanner wrench (P.N. 10185) unscrew the retaining nut and remove the lower shock tube (Fig 11).

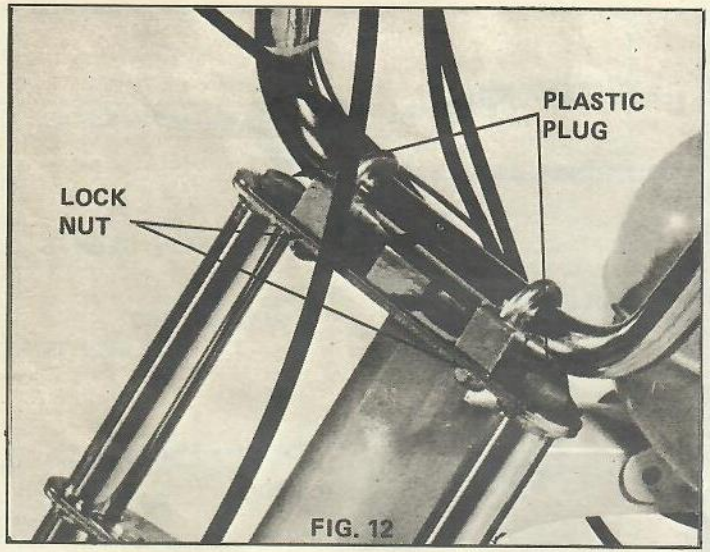

FIG. 12

NOTE: Packing nuts are sealed with hydraulic thread sealer at the time of installation and may require a small amount of heat in order to be loosened.

3. Remove shock spring and old oil.
4. Clean shock tube in mild solvent.
5. Reassemble entire unit in reverse order. Tighten packing nuts to 30 ft. lbs.

NOTE: We recommend LOCK TIGHT hydraulic sealer be applied to the threads.

6. Loosen and remove the 4 locks nuts and the upper plate and remove handlebars (Fig 12).
7. Remove the two plugs on the upper yoke plate and pour 3 oz. of hydraulic oil (S.A.E. 10) into each tube. Pour oil slowly to avoid trapping the air.
8. Reassemble handlebars.
9. Bounce the front wheel up and down a few times to allow the oil to flow past the hydraulic restrictors.

H. REAR SUSPENSION

The rear suspension is equipped with automotive type shock absorbers. Periodically apply a few drops of oil to the main shaft. (Inside of spring).

I. THROTTLE

The throttle is lubricated at the factory during assembly. If the throttle "sticks" (will not return to idle position) the throttle return spring may be broken or lubrication may be required. Lubricate as follows:

1. Remove the 2 screws in the adaptor ring, remove entire throttle control and apply oil to the end of the handlebar and all pivot points on the twist grip assembly.
2. Reassemble.

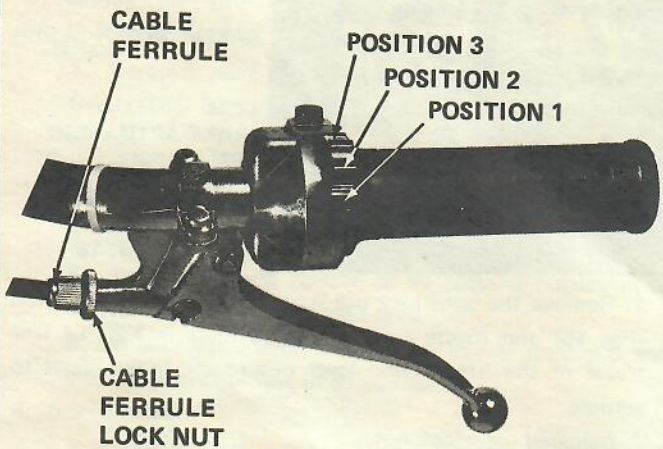

FIG. 13

J. BRAKES

The application of a few drops of oil on the pivot points behind the brake actuating arm and periodical cleaning of the brake shoes will insure quick, no fade stops.

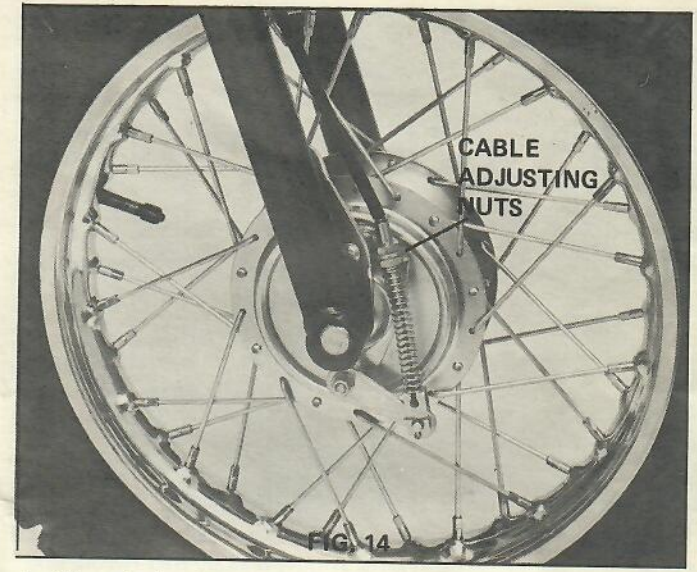

FIG. 14

A. Minor Brake Adjustment

1. Loosen the cable ferrule lock nut on the brake handle lever (Fig 13) and screw out the cable ferrule until there is approximately 1/2" of free travel in the brake hand lever before the brake starts to engage.
2. Retighten the cable ferrule lock nut.

When all adjustment has been used, loosen the cable ferrule lock nut and screw cable ferrule in all the way. Retighten the cable ferrule lock nut and proceed as follows:

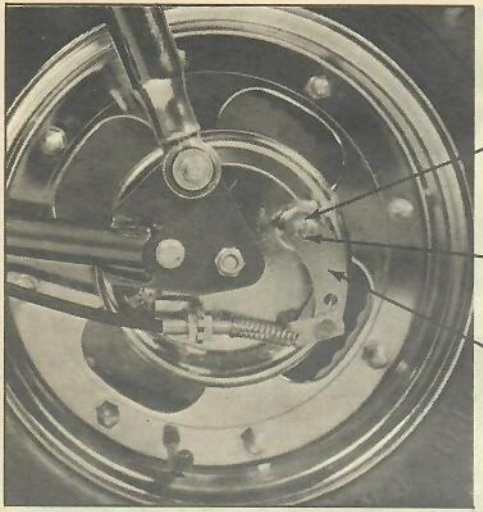

FIG. 15

B. Major Brake Adjustment

On Super Spyder, Green Horn, Widow Maker, Red Baron, and Blue Angel models, the front and rear brake adjustment is achieved as follows:

1. Loosen the two cable adjusting nuts (Fig 14) and rotate nuts until there is 1/2" of free travel in the brake hand lever before the brake starts to engage.
2. Retighten the cable adjusting nuts.

C. Major Brake Adjustment

On Scorpion, Scarab, Black Shadow, Shrike and Sabre the rear brake adjustment is achieved as follows:

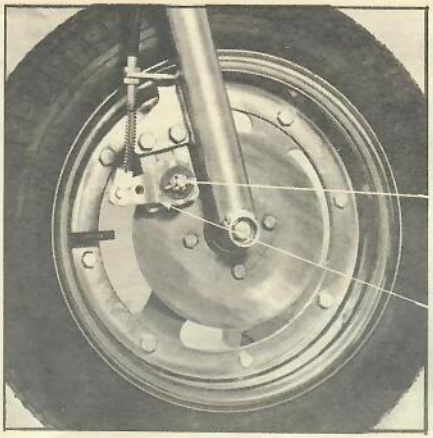

FIG. 16

1. Remove the cone lock nut from the brake actuating stud (Fig 15) and rotate rearwards until there is 1/2" of free travel in the brake hand lever before the brake starts to actuate.
2. Reinstall cone lock nut.

D. Major Brake Adjustment

On Scorpion, Scarab, and Black Shadow, the front brake adjustment is achieved as follows:

1. Remove the cotter pin from the front brake (Fig 16).
2. Tighten the castle nut until there is approximately 1/2" of free travel in the brake hand lever before the brake starts to engage.
3. Reinstall cotter pin.

K. WHEELS

Two different types of wheels are used. One type is a Mag style "split rim" and the other a Spoked wheel. Both types are equipped with "life-time" sealed bearings that require no maintenance. To remove the tire from the wheel, proceed as follows:

A. Split Rim Wheel:

1. Remove valve cap and stem. Empty all air from tire.

CAUTION: Be sure all air is out of tire before disassembling wheel.

2. Remove retainer bolts holding wheel halves together (Fig 17).

3. Reverse preceding to reassemble a wheel.

4. Inflate tire and release air to prevent creases in tube. Inflate tire to recommended pressure.

5. Be sure valve stem is centered in rim hole and secure stem with anchor nut (if so equipped).

B. Spoked Wheel:

1. Remove valve cap and stem. Empty all air from tires.

2. Use two tire removal irons and begin to work tire over rim edge. Use soap or tire lubricant on tire to assist removal. (DO NOT use oil or grease).

NOTE: Use caution not to pinch tube.

3. After removing one tire bead from wheel, remove tube from tire.

4. Repair tube if necessary and reassemble.

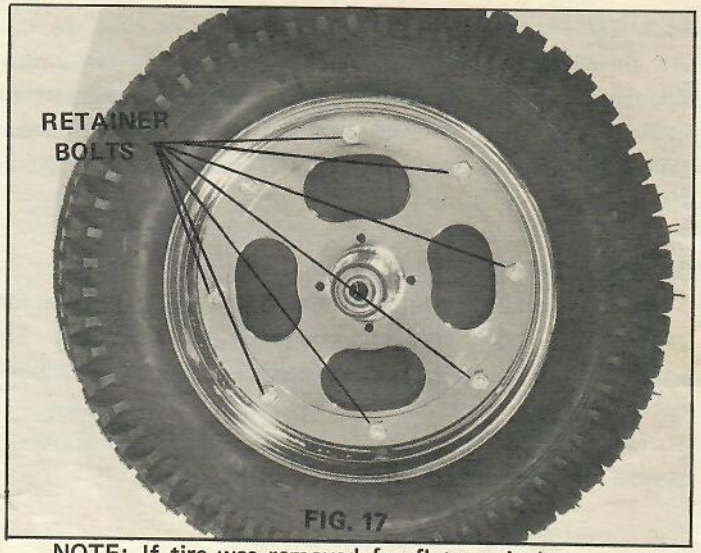

FIG. 17

NOTE: If tire was removed for flat repair, be sure object which punctured tube is removed from tire.

5. If tire is being replaced, work remaining tire bead off wheel.

6. Reverse removal procedure to install tire and tube.

7. Inflate tire and release air. This will position tube in tire and prevent creases. Be sure valve stem is centered in rim hole and secure stem with nut (if so equipped).

NOTE: Wheel spokes should be checked for tightness at least once a week.

L. TIRES

All Speedway "Minicycles" are equipped with heavy duty Speedway tires. The tread design is one of the most versatile available and gives maximum traction on any surface. To insure riding comfort and maximum tire life, keep tires inflated to 24 P.S.I.

M. EXHAUST SYSTEM

The muffler on Green Horn, Red Baron, Blue Angel, Scorpion, and Scarabs models are equipped with a spark arrestor. The spark arrestor must be cleaned periodically to make certain openings are not restricted.

To clean, remove screw plug from pipe (Fig 18) and operate engine to purge carbon through screw hole.

N. LIGHTING SYSTEM

A twelve volt electrical system inside the engine supplies current to the lights.

The lights switch is located on the left handlebar and controls the entire lighting system. The center position of the switch is "OFF" and "HI" or "LOW" beam of the headlight is achieved by moving the switch forward or backward.

NOTE: As a safety precaution, the tailight will remain "light" during engine operation.

A. Headlight

The headlight uses a 12 volt sealed beam unit. To replace the unit, proceed as follows:

1. Remove the headlight retainer by loosening the retainer screw so the retainer slips over the housing.
2. Remove sealed beam unit from housing and unplug wires.
3. Reverse procedure to install new sealed beam unit.

To adjust headlight beam, loosen the two screws in the mounting bracket and move headlight to desired position.

B. Tailight Replacement

1. Remove the two phillips head retaining screws which secure tailight lens.
2. Remove bulb.
3. Reverse procedure to install bulb.

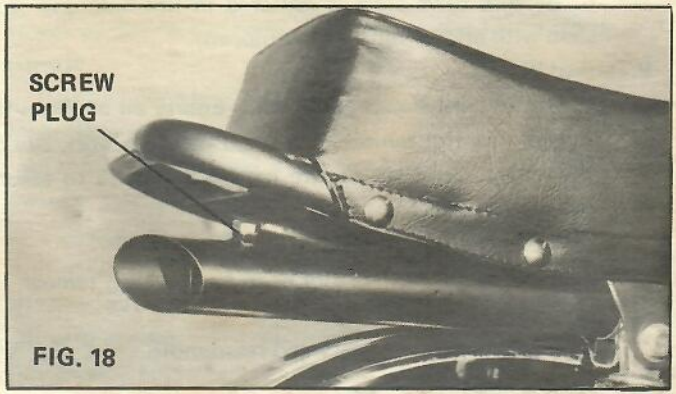

FIG. 18

SECTION 6
MAINTENANCE (Continued)

O. GENERAL INSPECTION

For trouble free operation it is recommended that you periodically inspect your machine for proper operation.

GENERAL INSPECTION CHART

Item	Daily	Weekly	Monthly
Brake Wear			*
Brake Operation	*		
Carburetor Adjustment		*	
Carburetor Flange Nuts			*
Crankcase Oil		*	
Drive Chain Adjustment		*	
Drive Belt Wear		*	
Electrical Wiring			*
Engine Mounting Bolts			*
Fuel Tank Contents	*		
Lights	*		
Driven Converter Lube		*	
Driven Converter Wear Plugs		*	
Tire Pressure		*	
Steering Operation	*		
Throttle Operation	*		
Axle Bolts		*	
Wheel Spokes		*	

SECTION 7
EXTENDED STORAGE

If you plan to store your Minicycle for an extended period of time, follow the procedure listed below:

1. Drain the carburetor by disconnecting fuel line. Start the engine and run the carburetor dry.
2. Drain the gas tank.
3. Remove the spark plug and pour one tablespoon of oil (S.A.E. 30 or 40) through the spark plug hole and turn over the engine a few times and coat the cylinder and cylinder walls. Replace the spark plug.
4. Remove the torque converter belt.
5. Cover the bike and store in a dry place to prevent working metal parts from rusting.

NOTES